reception

PRICE & SPECIFICATION GUIDE

overture height adjustable overture

Version: 01.15.24

DeskMakers

reception

revisions

10/24/19	Updated layout and finishes
01/01/21	Updated pricing and finishes
02/01/21	Corrected pricing on storage pedestals
09/01/21	Updated finishes
12/20/21	Updated pricing and finishes
03/31/22	Updated select pricing and skus
08/18/22	Added surcharge note
12/01/22	Updated pricing, discontinued 1 7/8" 29"H Overture, Convergence and Milano reception desks
04/01/23	Updated product information
10/18/23	Updated finishes
01/15/2024	Added height adjustable Overture reception desks

table of contents

Laminates	4-6
Pulls	7
Overture Product Details	8-17
Overture Reception Desks	18-39
Storage	40-41
Risers	42-43
Height Adjustable Overture	
Product Details	44-49
Pricing	50-63
Height Adjustable Bases	64-74
Terms and Conditions	75
Warranty	76

reception
Thermofuse Laminates

laminate finishes

standard thermofuse laminate (TFL)

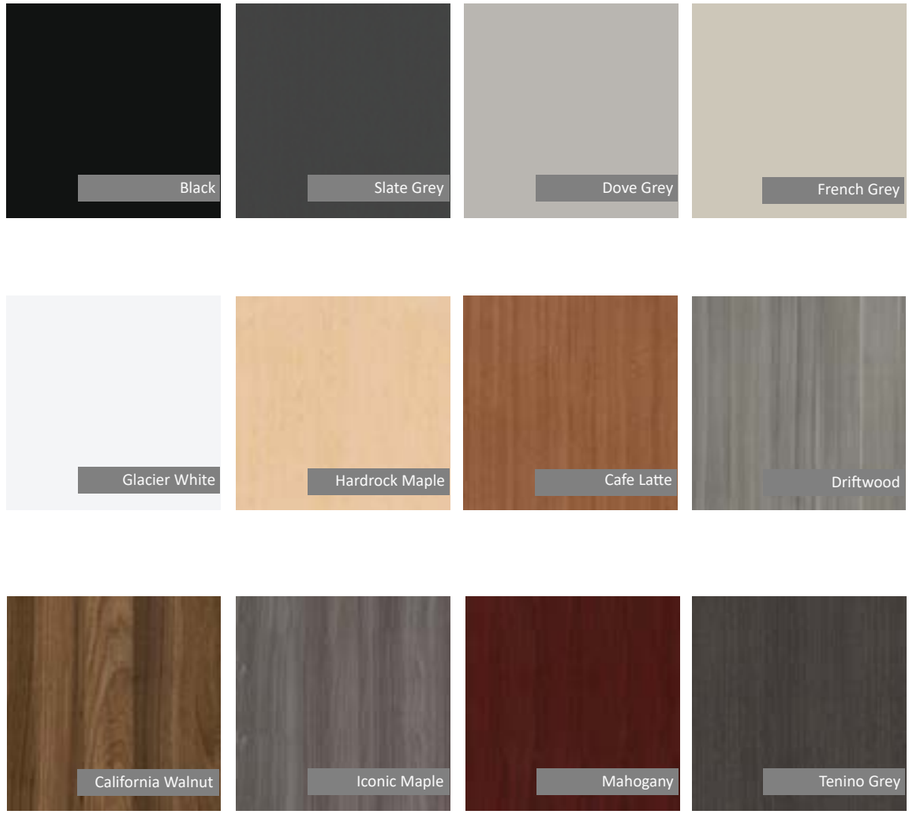

Matching 2MM PVC edgebanding is available for all Standard TFL finishes shown here.
For HPL match information please visit deskmakers.com/resources/materials

premium thermofuse laminate (TFL)

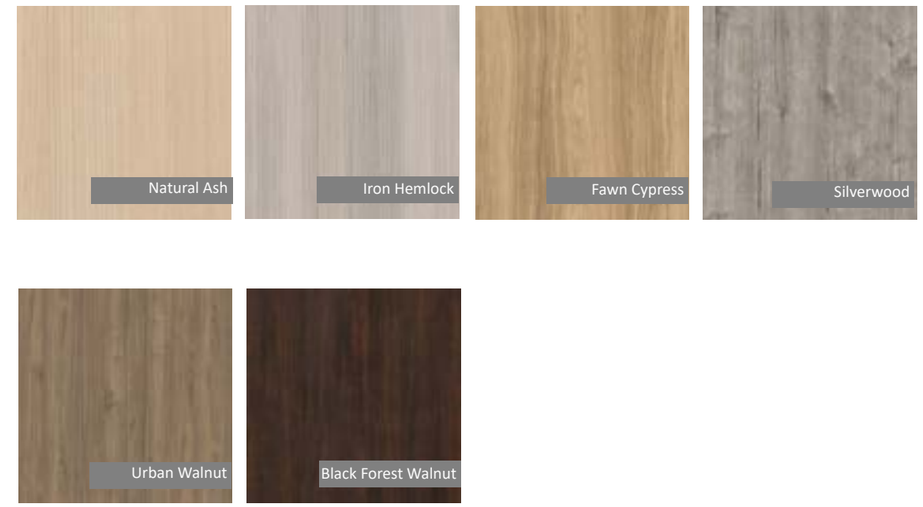

Premium TFLs require a 10% upcharge. Add item code OP-TTFL-1.
Matching 2MM PVC edgebanding is available for all Premium TFL finishes shown here.
For HPL match information please visit deskmakers.com/resources/materials

reception laminate finishes

high pressure laminate (HPL)

Pricing shown in this price list applies only to non-premium HPLs as follows:

- Wilsonart: Solids, Woodgrains, and Abstracts in Matte (-60) finish,
- Formica: Color Portfolio, Woodgrains, and Patterns in Matte (-58) finish
- Pionite: Solids, Woodgrains, and Abstracts in Suede (N) finish
- Arborite: Solids, Woodgrains, Textures and Abstracts in Matte (CA) finish
- Nevamar: Solids, Woodgrains, Stones and Abstracts in ARP (-T) finish

A minimum charge of $500 net per HPL color will be applied to each order.

Call customer service for pricing for all other HPLs.

Additional lead times required for HPL orders depending on material availability and order complexity.

high pressure laminate (HPL) pricing chart

Most DeskMakers product is made of Thermofuse laminate (TFL). As such, there is an upcharge for ordering product in high pressure laminate (HPL). This upcharge varies based on the product and the size of the HPL order.

Please note that only the portion of the order in HPL will be calculated to determine the level of HPL upcharges.

HPL is always available with DeskMakers standard 2MM edgebanding. Special order matching PVC 2MM edgebanding may be available for orders $25,000 List or larger, call customer service for pricing.

Product Category	Option Code	HPL UPCHARGE
WORKSURFACES All Shapes *Top surface HPL*	OP-HPL1-25-??	60%
CASEGOODS Top HPL only, balance TFL	OP-HPL1-1-??	25%
CASEGOODS Entire Unit HPL	OP-HPL1-4-??	120%
CASEGOODS HPL Drawer Fronts only	OP-HPL1-2-??	20%
CASEGOODS Top HPL and HPL Drawer Fronts	OP-HPL1-3-??	30%

reception pulls

standard pulls

Pulls are included on all drawers and cabinet doors for no upcharge.

101SN

101BL

105SN

115SN

115BL

201SN

125SN*

125BL*

201BL

*The 125SN/BL pull is 7.5" long. On lateral file drawers and larger cabinet doors a longer 12.5" pull in the same style will be used. This may be identified as a "127SN/BL" pull on your acknowledgment.

Configurations

Overture is available in five footprint configurations combining multiple components to create the complete desk.

Freestanding

Consists of:
- Desk Shell
- Transaction Counter
- One or Two Pedestals

Gallery

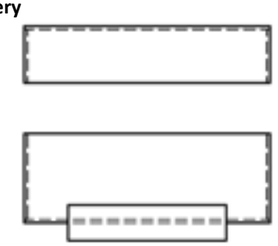

Consists of:
- Desk Shell
- Transaction Counter
- Credenza Shell
- One or More Pedestals

L-Shape

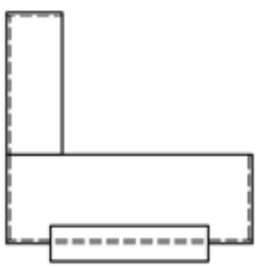

Consists of:
- Desk Shell
- Transaction Counter
- Return Shell
- One or More Pedestals

U-Shape with Left and Right Returns

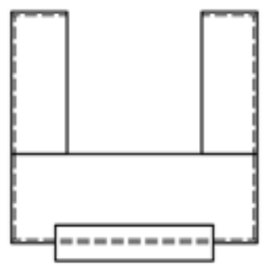

Consists of:
- Desk Shell
- Transaction Counter
- Two Return Shells
- One or More Pedestals

U-Shape with Bridge and Credenza

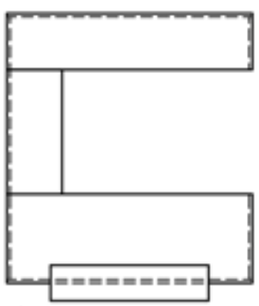

Consists of:
- Desk Shell
- Transaction Counter
- Bridge Shell
- Credenza Shell
- One or More Pedestals

Add on ADA Section

Left ADA Model Shown

ADA sections can be added to a desk shell.

Overture Reception Desks

Overture offers three different shell styles, a variety of transaction counter add-ons and multiple design components that can be used to create multiple shapes and styles to fit an user's welcome space.

Desk Height Shell

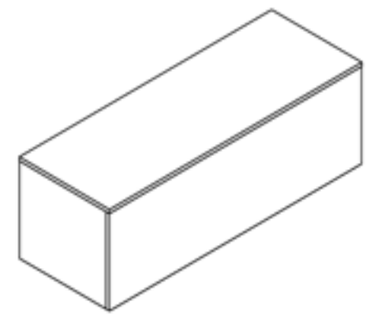

All 1-1/8" Thick Material

- All 1-1/8" thick material.
- TFL or HPL with 2mm PVC edges in DeskMakers standard colors.
- Full height modesty panel and end panels are flush to worksurfaces edges.

Transaction Height Shells

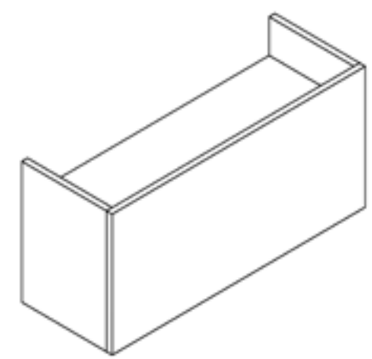

1-7/8" Thick Front and Side Panels, 1-1/8" Thick Worksurface

- 1-7/8" thick front panel and side panels.
- 1-1/8" thick worksurface inset between front panel and side panels.
- TFL or HPL with 2mm PVC edges in DeskMakers standard colors.

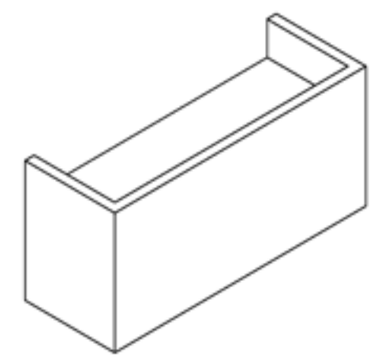

3" Thick Front and Side Panels, 1-1/8" Thick Worksurface

- 3" thick front panel and side panels.
- 1-1/8" thick worksurface inset between front panel and side panels.
- Front and side panels only available in HPL
- Worksurface in TFL or HPL with 2mm PVC edges in DeskMakers standard colors.

Desk Height Shells

All 1-1/8" Material

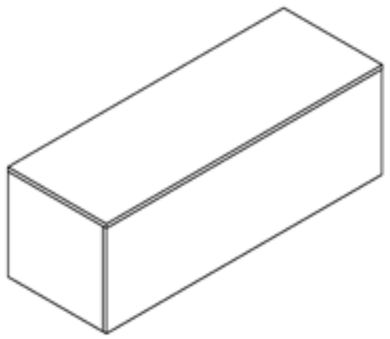

Features

- All 1-1/8" thick material.
- TFL or HPL with 2mm PVC edges in DeskMakers standard colors.
- Full height modesty panel and end panels are flush to worksurfaces edges.
- Storage pedestals specified separately.
- Specify grommet and location.

Desk Shell

- 30" and 36" depths.
- Lengths 60" to 120" in 6" increments.
- Worksurface is 29-1/8" high. Levelers add 1/2" to the height.

Return Shell

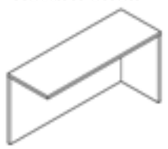

- 19" and 24" depths.
- Lengths 36" to 72" in 6" increments.
- Right and Left hand units.
- No storage pedestals on 19" deep.

Bridge Shell

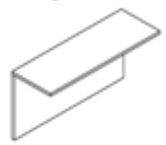

- 19" and 24" depths.
- Lengths 36" to 72" in 6" increments.
- No storage pedestals on 19" deep.

Credenza Shell

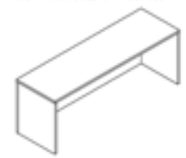

- 19" and 24" depths.
- Lengths 60" to 120" in 6" increments.
- No storage pedestals on 19" deep.

Support Details

Lengths 60" - 72"

Lengths 78" - 96"

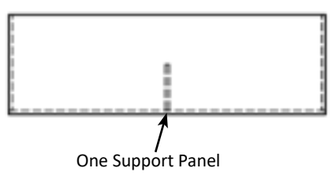

Lengths 102" - 120"

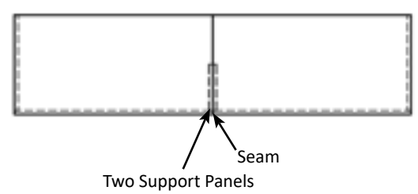

- Desk and credenza shells 60" to 72" do not have a center support panel.
- Desk and credenza shells 78" to 96" include a 1-1/8" thick center support panel.
- Desk and credenza shells wider than 96" come in two pieces with a center seam on the worksurface and front modesty and include two 1-1/8" thick center support panels.
- Center support panels are 15" deep on 30" deep desk shells and 18" deep on 36" deep desk shells.
- Center support panels are 9" deep on 19" deep credenza shells and 12" deep on 24" deep credenza shells.

Grain Direction

- Grain Direction runs horizontal.

Desk Shell

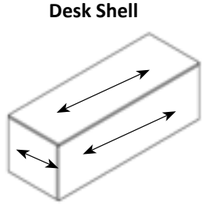

Return Shell

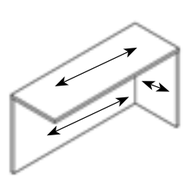

Bridge Shell

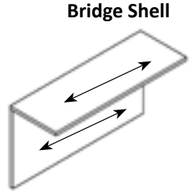

Credenza Shell

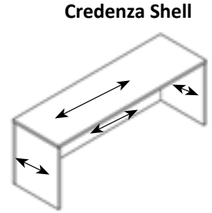

Transaction Height Shells

1-7/8" Thick Wall Panels, 1-1/8" Thick Worksurface

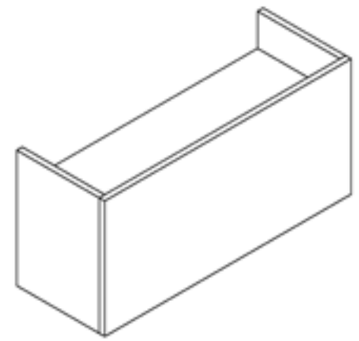

Features

- 1-7/8" thick front panel and side panels.
- 1-1/8" thick worksurface inset between front panel and side panels.
- TFL or HPL with 2mm PVC edges in DeskMakers standard colors.
- Storage pedestals specified separately.
- Specify grommet and location.

Desk Shell

- 30" and 36" depths.
- Lengths 60" to 120" in 6" increments.
- Front and side panels are 40" high. Levelers add 1/2" to the height.
- Worksurface is 29-1/8" high and attaches to wall panels with brackets.

Return Shell

- 24" depths.
- Lengths 36" to 72" in 6" increments.
- Right and Left hand units.
- Only 18" deep pedestals can be used.

Bridge Shell

- 19" and 24" depths.
- Lengths 36" to 72" in 6" increments.
- Only 18" deep pedestals can be used on 24" deep, none on 19" deep.

Credenza Shell

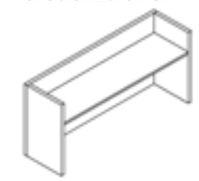

- 24" depths.
- Lengths 60" to 120" in 6" increments.
- Only 18" deep pedestals can be used.

Lengths 60" - 72"

Lengths 78" - 96"

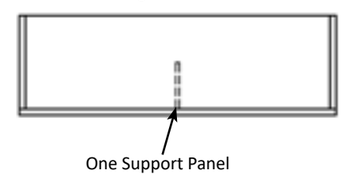

Lengths 102" - 120"

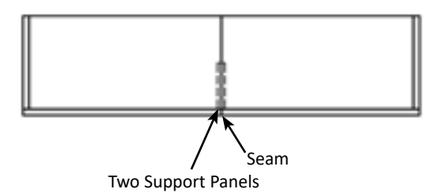

- Desk and credenza shells 60" to 72" do not have a center support panel.
- Desk and credenza shells 78" to 96" include a 1-1/8" thick center support panel.
- Desk and credenza shells wider than 96" come in two pieces with a center seam on the worksurface and front modesty and include two 1-1/8" thick center support panels.
- Center support panels are 15" deep on 30" deep desk shells and 18" deep on 36" deep desk shells.
- Center support panels are 12" deep on 24" deep credenza shells.

Grain Direction

- Grain Direction runs horizontal.

Desk Shell

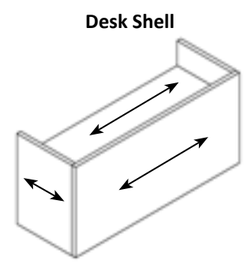

Return Shell

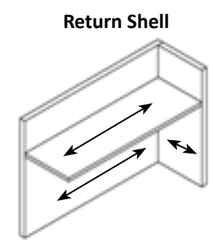

Bridge Shell

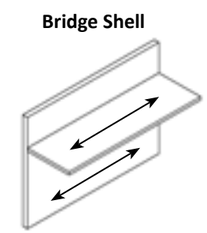

Credenza Shell

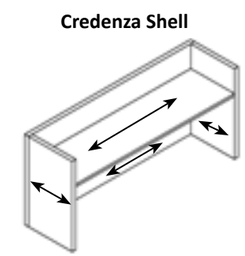

Transaction Height Shells

3" Thick Wall Panels, 1-1/8" Thick Worksurface

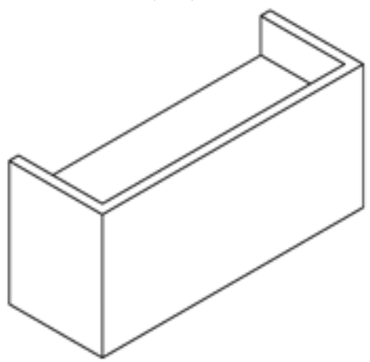

Features

- 3" thick front panel and side panels.
- 1-1/8" thick worksurface inset between front panel and side panels.
- Front and side panels only available in HPL
- Worksurface in TFL or HPL with 2mm PVC edges in DeskMakers standard colors.
- Storage pedestals specified separately.
- Specify grommet and location.

Desk Shell

- 30" and 36" depths.
- Lengths 60" to 120" in 6" increments.
- Front and side panels are 40" high. Levelers add 1/2" to the height.
- Worksurface is 29-1/8" high and attaches to wall panels with brackets.

Return Shell

- 24" depths.
- Lengths 36" to 72" in 6" increments.
- Right and Left hand units.
- Only 18" deep pedestals can be used.

Bridge Shell

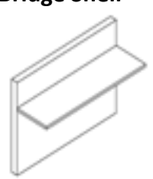

- 19" and 24" depths.
- Lengths 36" to 72" in 6" increments.
- Only 18" deep pedestals can be used on 24" deep, none on 19" deep.

Credenza Shell

- 24" depths.
- Lengths 60" to 120" in 6" increments.
- Only 18" deep pedestals can be used.

Lengths 60" - 72"

Lengths 78" - 96"

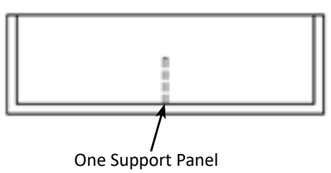

Lengths 102" - 120"

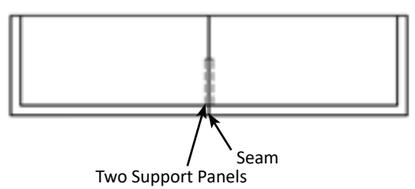

- Desk and credenza shells 60" to 72" do not have a center support panel.
- Desk and credenza shells 78" to 96" include a 1-1/8" thick center support panel.
- Desk and credenza shells wider than 96" come in two pieces with a center seam on the worksurface and front modesty and include two 1-1/8" thick center support panels.
- Center support panels are 15" deep on 30" deep desk shells and 18" deep on 36" deep desk shells.
- Center support panels are 12" deep on 24" deep credenza shells.

Grain Direction

- Grain Direction runs horizontal.

Desk Shell

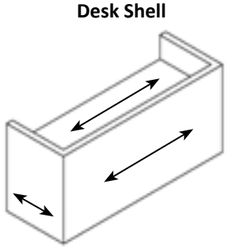

Return Shell

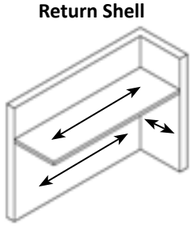

Bridge Shell

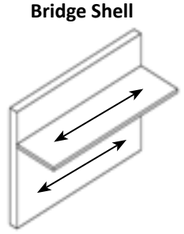

Credenza Shell

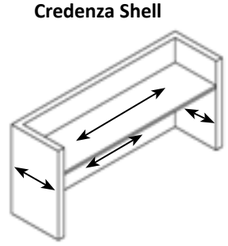

Shroud Transaction Counter

For use with Desk Height Shells

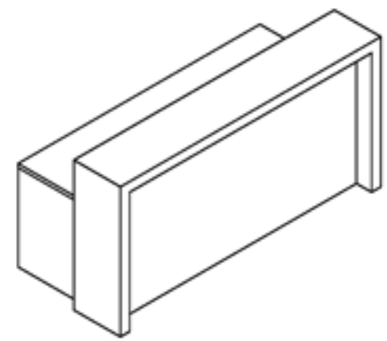

Features

- 1-7/8" thick top and side panels.
- 3/4" thick full height modesty panel is centered on top and side panels.
- 12" deep.
- 42" high. Levelers add 1/2" to the height.
- Width is 4" wider than desk shell width.
- TFL has 2mm PVC edges in DeskMakers standard colors. HPL has self edge.
- Can add glass transaction counter on top.
- Units wider than 94" are two pieces with a center seam on the top and front panel.

Shroud Sizing

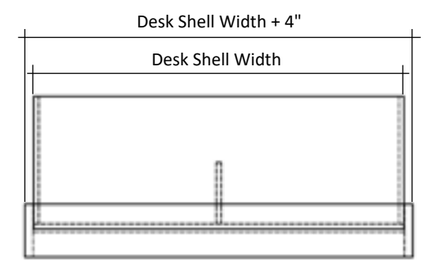

Edge Seams

TFL with PVC Edges

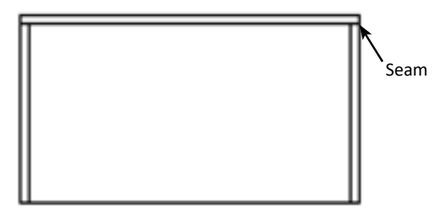

HPL with HPL Edges

Grain Direction

- Grain Direction runs horizontal on top and front panel.
- Grain Direction runs vertical on side panels.
- Grain direction on two piece shroud counters will not line up.

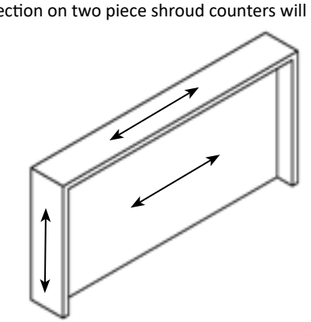

Stack-On Transaction Counter

For use with Desk Height Shells

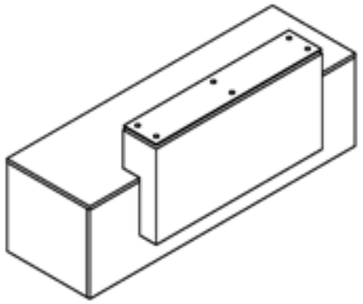

Features

- 12" deep, 6" overlaps worksurface.
- 30" high, 12" above worksurface.
- TFL has 2mm PVC edges in DeskMakers standard colors. HPL has self edge.
- Can add glass transaction counter on top.
- Not available with 1-7/8" thick worksurfaces or transaction height desks.
- TFL version is all 3/4" thick material, with visible seams.
- HPL version has 1-1/8" thick top and sides.

Placement

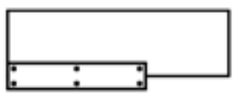

Right Placement

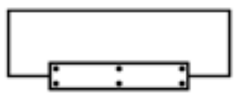

Center Placement

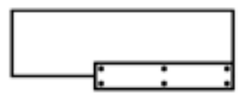

Left Placement

Grain Direction

- Grain Direction runs horizontal.
- Grain direction on two piece L-Shape counters will not line up.

Single | **L-Shape**

HPL

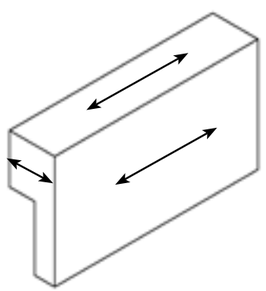

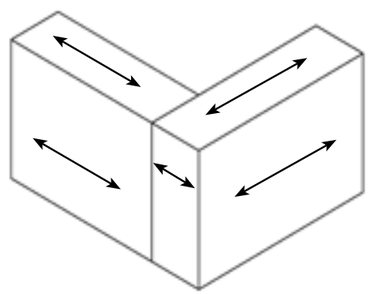

TFL

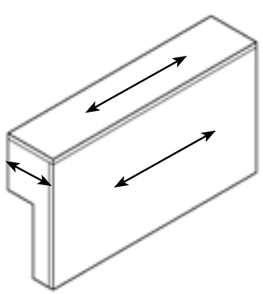

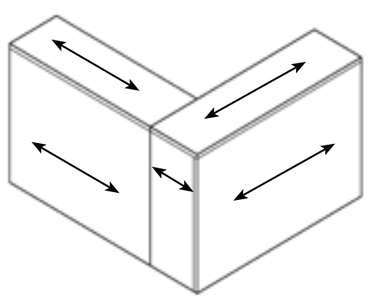

Maximum Sizes for Freestanding Desks with HPL Stack-On Counters

- One or more pedestals may be required based on the desk size.
- Single pedestal needs to be positioned directly opposite of the stack-on to act as a counter weight.
- Maximum HPL stack-on counter sizes based on weight of stack-on with a glass counter.

Desk Length \ Stack-On Length	30"	36"	42"	48"	54"	60"	66"	72"
60"	1 Ped	2 Peds	2 Peds	2 Peds	N/A	N/A	N/A	N/A
66"	1 Ped	2 Peds	2 Peds	2 Peds	N/A	N/A	N/A	N/A
72"	1 Ped	2 Peds	2 Peds	2 Peds	N/A	N/A	N/A	N/A
78"	1 Ped	2 Peds	2 Peds	2 Peds	2 Peds	N/A	N/A	N/A
84"	1 Ped	1 Ped	2 Peds	2 Peds	2 Peds	N/A	N/A	N/A
90"	1 Ped	1 Ped	2 Peds	2 Peds	2 Peds	N/A	N/A	N/A
96"	1 Ped	1 Ped	2 Peds	2 Peds	2 Peds	N/A	N/A	N/A
102"	1 Ped	1 Ped	2 Peds	2 Peds	2 Peds	2 Peds	N/A	N/A
108"	1 Ped	1 Ped	1 Ped	2 Peds	2 Peds	2 Peds	N/A	N/A
114"	1 Ped	1 Ped	1 Ped	2 Peds	2 Peds	2 Peds	2 Peds	N/A
120"	1 Ped	1 Ped	1 Ped	2 Peds	2 Peds	2 Peds	2 Peds	2 Peds

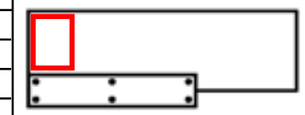

Right Placement

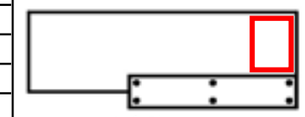

Left Placement

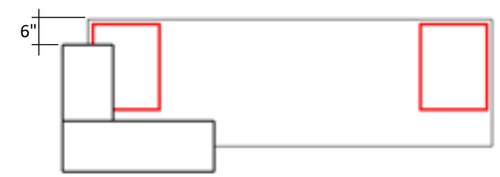

When using an L-Shape Stack-on with a straight desk, follow the same chart above to determine ped requirements according to longest side of the counter.
Always select a counter size that stops 6" short of the front of the desk.

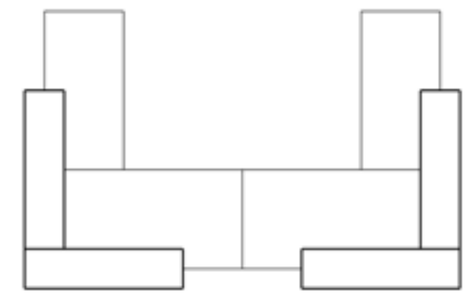

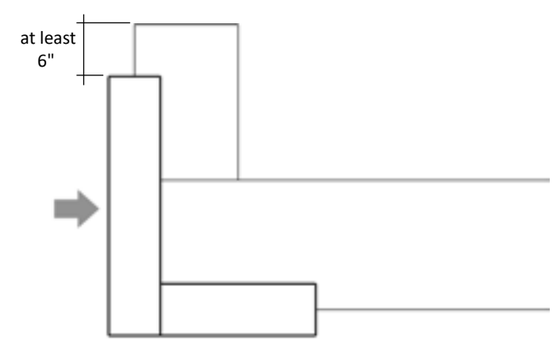

When using an L-Shape Stack-on with a multi-section desk, the front (long seamless side) of the stack-on should face the direction of approach.
The stack-on counter should always stop at least 6" short of the end of the surface it sits on.

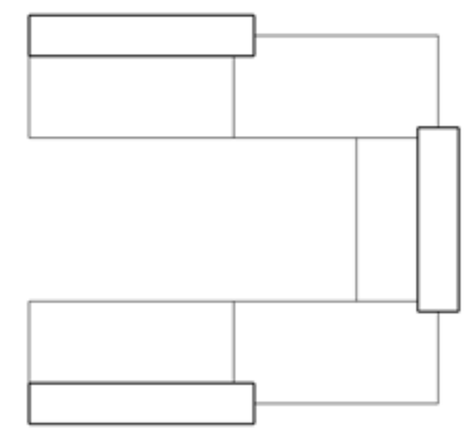

A large reception station may utilize multiple stack-on units. Please note that individual stack-ons are not designed to be connected to one another and are not guaranteed to sit flush or line-up. It is recommended when using multiple stack-ons to place them apart to create multi-level surfaces or mark individual work areas as in the examples above.

Hang-On Transaction Counter

For use with Transaction Height Shells

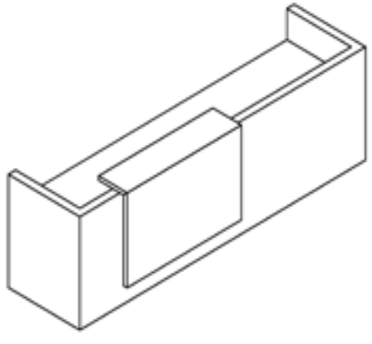

Features

- 1-7/8" thick top and front panel.
- 12" deep & 34" high.
- 1" gap between hang-on counter and front of desk shell panel.
- TFL has 2mm PVC edges in DeskMakers standard colors. HPL has self edge.
- Can add glass transaction counter on top.
- Not available with desk height shells.
- Entire hang-on counter must be supported by desk shell.

Placement

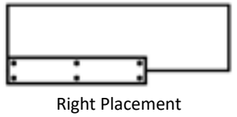

Right Placement

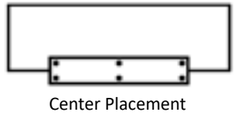

Center Placement

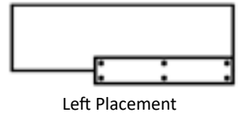

Left Placement

Edge Seams

TFL with PVC Edges

HPL with HPL Edges

Grain Direction

- Grain Direction runs horizontal.

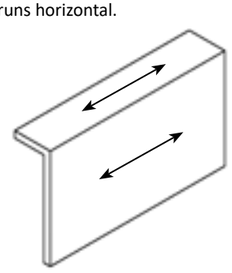

Angled Hang-On Transaction Counter

For use with Transaction Height Shells

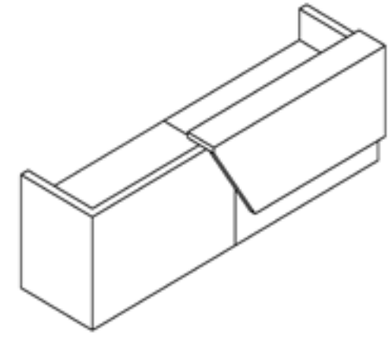

Features

- 1-7/8" thick top and front panel.
- 12" deep & 34" high.
- 1" gap between hang-on counter and front of desk shell panel.
- Only available in HPL with self edge.
- Can add glass transaction counter on top.
- Not available with desk height shells.
- Entire hang-on counter must be supported by desk shell.

Placement

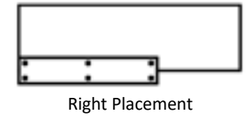

Right Placement

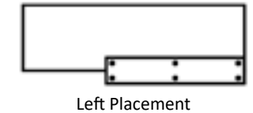

Left Placement

Edge Seams

HPL with HPL Edges

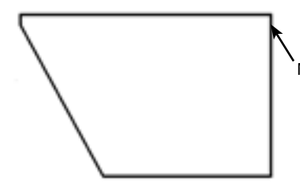

Left Model

Grain Direction

- Grain Direction runs horizontal.

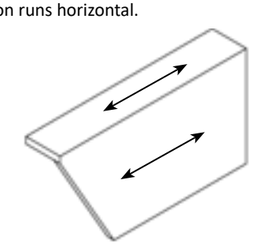

Desk Shell Desk Height

All 1-1/8" Thick Material

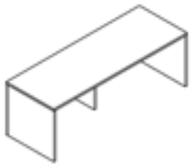

Model Number	Depth	Length	Height	TFL (T)	HPL (H)
30" Deep					
OV-DSD1-3060-?	30	60	29	$1,589	$2,843
OV-DSD1-3066-?	30	66	29	$1,596	$2,853
OV-DSD1-3072-?	30	72	29	$1,601	$2,866
OV-DSD1-3078-?	30	78	29	$1,756	$3,144
OV-DSD1-3084-?	30	84	29	$1,763	$3,154
OV-DSD1-3090-?	30	90	29	$1,868	$3,345
OV-DSD1-3096-?	30	96	29	$1,875	$3,355
OV-DSD1-3002-?	30	102	29	$2,789	$4,991
OV-DSD1-3008-?	30	108	29	$2,797	$5,004
OV-DSD1-3014-?	30	114	29	$2,825	$5,057
OV-DSD1-3020-?	30	120	29	$2,834	$5,071
36" Deep					
OV-DSD1-3660-?	36	60	29	$1,826	$3,268
OV-DSD1-3666-?	36	66	29	$1,833	$3,280
OV-DSD1-3672-?	36	72	29	$1,839	$3,293
OV-DSD1-3678-?	36	78	29	$1,997	$3,572
OV-DSD1-3684-?	36	84	29	$2,003	$3,584
OV-DSD1-3690-?	36	90	29	$2,110	$3,773
OV-DSD1-3696-?	36	96	29	$2,115	$3,787
OV-DSD1-3602-?	36	102	29	$3,032	$5,424
OV-DSD1-3608-?	36	108	29	$3,039	$5,440
OV-DSD1-3614-?	36	114	29	$3,068	$5,490
OV-DSD1-3620-?	36	120	29	$3,075	$5,503

- All 1-1/8" thick material with horizontal grain.
- Includes adjustable glides.
- Edges are DeskMakers standard 2MM PVC edgebanding for both TFL and HPL finishes.
- Desk shells 78" and longer include a center support panel. Desk shells over 96" are 2 pieces with a center seam.

Return Shell Desk Height

All 1-1/8" Thick Material

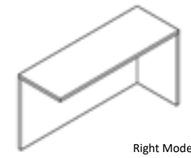

Right Model Shown

Model Number		Depth	Length	Height	TFL (T)	HPL (H)
19" Deep						
Left Model	**Right Model**					
OV-RSD1-1936-L-?	OV-RSD1-1936-R-?	19	36	29	$1,102	$1,972
OV-RSD1-1942-L-?	OV-RSD1-1942-R-?	19	42	29	$1,107	$1,983
OV-RSD1-1948-L-?	OV-RSD1-1948-R-?	19	48	29	$1,116	$1,996
OV-RSD1-1954-L-?	OV-RSD1-1954-R-?	19	54	29	$1,189	$2,126
OV-RSD1-1960-L-?	OV-RSD1-1960-R-?	19	60	29	$1,194	$2,138
OV-RSD1-1966-L-?	OV-RSD1-1966-R-?	19	66	29	$1,484	$2,653
OV-RSD1-1972-L-?	OV-RSD1-1972-R-?	19	72	29	$1,491	$2,667
24" Deep						
Left Model	**Right Model**					
OV-RSD1-2436-L-?	OV-RSD1-2436-R-?	24	36	29	$1,304	$2,333
OV-RSD1-2442-L-?	OV-RSD1-2442-R-?	24	42	29	$1,310	$2,343
OV-RSD1-2448-L-?	OV-RSD1-2448-R-?	24	48	29	$1,317	$2,355
OV-RSD1-2454-L-?	OV-RSD1-2454-R-?	24	54	29	$1,388	$2,485
OV-RSD1-2460-L-?	OV-RSD1-2460-R-?	24	60	29	$1,395	$2,497
OV-RSD1-2466-L-?	OV-RSD1-2466-R-?	24	66	29	$1,684	$3,014
OV-RSD1-2472-L-?	OV-RSD1-2472-R-?	24	72	29	$1,690	$3,026

- All 1-1/8" thick material with horizontal grain.
- Includes adjustable glides.
- Edges are DeskMakers standard 2MM PVC edgebanding for both TFL and HPL finishes.
- Includes brackets for attaching to desk shell.
- Please note that storage pedestals will not fix under a 19" return, only the 24".

Bridge Shell Desk Height

All 1-1/8" Thick Material

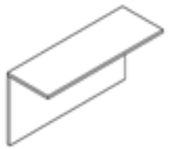

Model Number	Depth	Length	Height	TFL (T)	HPL (H)
19" Deep					
OV-BRD1-1936-?	19	36	29	$888	$1,590
OV-BRD1-1942-?	19	42	29	$895	$1,602
OV-BRD1-1948-?	19	48	29	$902	$1,615
OV-BRD1-1954-?	19	54	29	$974	$1,742
OV-BRD1-1960-?	19	60	29	$981	$1,755
OV-BRD1-1966-?	19	66	29	$1,270	$2,272
OV-BRD1-1972-?	19	72	29	$1,276	$2,283
24" Deep					
OV-BRD1-2436-?	24	36	29	$890	$1,593
OV-BRD1-2442-?	24	42	29	$898	$1,607
OV-BRD1-2448-?	24	48	29	$904	$1,616
OV-BRD1-2454-?	24	54	29	$977	$1,746
OV-BRD1-2460-?	24	60	29	$984	$1,761
OV-BRD1-2466-?	24	66	29	$1,273	$2,277
OV-BRD1-2472-?	24	72	29	$1,279	$2,289

- All 1-1/8" thick material with horizontal grain.
- Includes adjustable glides.
- Edges are DeskMakers standard 2MM PVC edgebanding for both TFL and HPL finishes.
- Includes brackets for attaching to desk and credenza shells.
- Please note that storage pedestals will not fix under a 19" bridge, only the 24".

Credenza Shell Desk Height

All 1-1/8" Thick Material

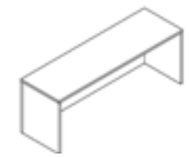

Model Number	Depth	Length	Height	TFL (T)	HPL (H)
19" Deep					
OV-CSD1-1960-?	19	60	29	$1,571	$2,810
OV-CSD1-1966-?	19	66	29	$1,576	$2,820
OV-CSD1-1972-?	19	72	29	$1,583	$2,835
OV-CSD1-1978-?	19	78	29	$1,736	$3,106
OV-CSD1-1984-?	19	84	29	$1,742	$3,116
OV-CSD1-1990-?	19	90	29	$1,768	$3,165
OV-CSD1-1996-?	19	96	29	$1,776	$3,176
OV-CSD1-1902-?	19	102	29	$2,764	$4,945
OV-CSD1-1908-?	19	108	29	$2,771	$4,958
OV-CSD1-1914-?	19	114	29	$2,800	$5,010
OV-CSD1-1920-?	19	120	29	$2,807	$5,023
24" Deep					
OV-CSD1-2460-?	24	60	29	$1,578	$2,825
OV-CSD1-2466-?	24	66	29	$1,585	$2,837
OV-CSD1-2472-?	24	72	29	$1,592	$2,847
OV-CSD1-2478-?	24	78	29	$1,745	$3,122
OV-CSD1-2484-?	24	84	29	$1,752	$3,135
OV-CSD1-2490-?	24	90	29	$1,778	$3,182
OV-CSD1-2496-?	24	96	29	$1,785	$3,194
OV-CSD1-2402-?	24	102	29	$2,775	$4,966
OV-CSD1-2408-?	24	108	29	$2,783	$4,982
OV-CSD1-2414-?	24	114	29	$2,811	$5,031
OV-CSD1-2420-?	24	120	29	$2,820	$5,045

- All 1-1/8" thick material with horizontal grain.
- Includes adjustable glides.
- Edges are DeskMakers standard 2MM PVC edgebanding for both TFL and HPL finishes.
- Includes brackets for attaching to bridge shell. Can be freestanding.
- Credenza shells 78" and longer include a center support panel. Credenza shells over 96" are 2 pieces with a center seam.
- Please note that storage pedestals will not fix under a 19" credenza, only the 24".

ADA Section with 10" High Modesty Panel

All 1-1/8" Thick Material

Model Number	Depth	Length	Height	TFL (T)	HPL (H)
30" Deep					
OV-ADA1-3030-?	30	30	29	$1,143	$2,045
OV-ADA1-3036-?	30	36	29	$1,172	$2,098
36" Deep					
OV-ADA1-3630-?	36	30	29	$1,378	$2,466
OV-ADA1-3636-?	36	36	29	$1,408	$2,519

- 10" high modesty panel is centered on the worksurface and end panel.
- All pieces are 1-1/8" thick material with horizontal grain.
- Includes adjustable glides.
- Edges are DeskMakers standard 2MM PVC edgebanding for both TFL and HPL finishes.
- Includes brackets for attaching to desk shell.

ADA Section with Full Height Modesty Panel

All 1-1/8" Thick Material

Left Model Shown

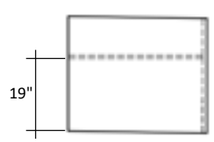

Model Number		Depth	Length	Height	TFL (T)	HPL (H)
30" Deep						
Left Model	**Right Model**					
OV-ADA2-3030-L-?	OV-ADA2-3030-R-?	30	30	29	$1,221	$2,187
OV-ADA2-3036-L-?	OV-ADA2-3036-R-?	30	36	29	$1,224	$2,190
36" Deep						
Left Model	**Right Model**					
OV-ADA2-3630-L-?	OV-ADA2-3630-R-?	36	30	29	$1,457	$2,608
OV-ADA2-3636-L-?	OV-ADA2-3636-R-?	36	36	29	$1,458	$2,609

- Full height modesty panel is recessed 19" away from the guest side .
- All 1-1/8" thick material with horizontal grain.
- Includes adjustable glides.
- Edges are DeskMakers standard 2MM PVC edgebanding for both TFL and HPL finishes.
- Includes brackets for attaching to desk shell.

ADA Section with 10" High Modesty Panel

1-7/8" Thick Worksurface and Side Panels, 3/4" Thick Modesty Panel

Model Number	Depth	Length	Height	TFL (T)	HPL (H)
30" Deep					
OV-ADA3-3030-?	30	30	30	$2,416	$4,324
OV-ADA3-3036-?	30	36	30	$2,423	$4,336
36" Deep					
OV-ADA3-3630-?	36	30	30	$2,859	$5,116
OV-ADA3-3636-?	36	36	30	$2,866	$5,127

- 10" high modesty panel is centered on the worksurface and end panel.
- Worksurface and end panel are 1-7/8" thick material. Modesty panel is 3/4" thick material. Grain runs horizontal.
- Includes adjustable glides.
- Edges are DeskMakers standard 2MM PVC edgebanding for both TFL and HPL finishes.
- Includes brackets for attaching to desk shell.

ADA Section with Full Height Modesty Panel

1-7/8" Thick Worksurface and Side Panels, 3/4" Thick Modesty Panel

Left Model Shown

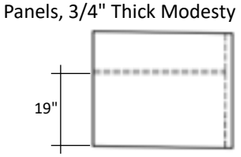

Model Number		Depth	Length	Height	TFL (T)	HPL (H)
30" Deep						
Left Model	**Right Model**					
OV-ADA4-3030-L-?	OV-ADA4-3030-R-?	30	30	30	$2,425	$4,341
OV-ADA4-3036-L-?	OV-ADA4-3036-R-?	30	36	30	$2,434	$4,354
36" Deep						
Left Model	**Right Model**					
OV-ADA4-3630-L-?	OV-ADA4-3630-R-?	36	30	30	$2,870	$5,136
OV-ADA4-3636-L-?	OV-ADA4-3636-R-?	36	36	30	$2,876	$5,146

- Full height modesty panel is recessed 19" away from the guest side .
- Worksurface and end panel are 1-7/8" thick material. Modesty panel is 3/4" thick material. Grain runs horizontal.
- Includes adjustable glides.
- Edges are DeskMakers standard 2MM PVC edgebanding for both TFL and HPL finishes.
- Includes brackets for attaching to desk shell.

Desk Shell Transaction Height

1-7/8" Thick Wall Panels, 1-1/8" Thick Worksurface

Model Number	Depth	Length	Height	TFL (T)	HPL (H)
30" Deep					
OV-DST2-3060-?	30	60	40	$4,522	$8,093
OV-DST2-3066-?	30	66	40	$4,528	$8,102
OV-DST2-3072-?	30	72	40	$4,535	$8,116
OV-DST2-3078-?	30	78	40	$4,691	$8,392
OV-DST2-3084-?	30	84	40	$4,698	$8,407
OV-DST2-3090-?	30	90	40	$5,053	$9,042
OV-DST2-3096-?	30	96	40	$5,060	$9,054
OV-DST2-3002-?	30	102	40	$6,703	$11,994
OV-DST2-3008-?	30	108	40	$6,710	$12,009
OV-DST2-3014-?	30	114	40	$6,739	$12,057
OV-DST2-3020-?	30	120	40	$6,746	$12,071
36" Deep					
OV-DST2-3660-?	36	60	40	$4,759	$8,519
OV-DST2-3666-?	36	66	40	$4,768	$8,531
OV-DST2-3672-?	36	72	40	$4,774	$8,541
OV-DST2-3678-?	36	78	40	$4,931	$8,825
OV-DST2-3684-?	36	84	40	$4,938	$8,837
OV-DST2-3690-?	36	90	40	$5,293	$9,472
OV-DST2-3696-?	36	96	40	$5,300	$9,485
OV-DST2-3602-?	36	102	40	$6,945	$12,430
OV-DST2-3608-?	36	108	40	$6,955	$12,444
OV-DST2-3614-?	36	114	40	$6,986	$12,501
OV-DST2-3620-?	36	120	40	$6,990	$12,508

- Wall panels are 1-7/8" thick material. Worksurface is 1-1/8" thick material. Grain runs horizontal.
- Includes adjustable glides.
- Edges are DeskMakers standard 2MM PVC edgebanding for both TFL and HPL finishes.
- Desk shells 78" and longer include a center support panel. Desk shells over 96" are 2 pieces with a center seam.

Return Shell Transaction Height

1-7/8" Thick Wall Panels, 1-1/8" Thick Worksurface

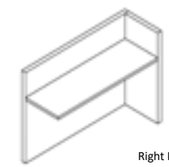

Right Model Shown

Model Number		Depth	Length	Height	TFL (T)	HPL (H)
24" Deep						
Left Model	**Right Model**					
OV-RST2-2436-L-?	OV-RST2-2436-R-?	24	36	40	$3,370	$6,031
OV-RST2-2442-L-?	OV-RST2-2442-R-?	24	42	40	$3,378	$6,044
OV-RST2-2448-L-?	OV-RST2-2448-R-?	24	48	40	$3,384	$6,056
OV-RST2-2454-L-?	OV-RST2-2454-R-?	24	54	40	$3,411	$6,105
OV-RST2-2460-L-?	OV-RST2-2460-R-?	24	60	40	$3,479	$6,227
OV-RST2-2466-L-?	OV-RST2-2466-R-?	24	66	40	$3,624	$6,486
OV-RST2-2472-L-?	OV-RST2-2472-R-?	24	72	40	$3,632	$6,499

- Wall panels are 1-7/8" thick material. Worksurface is 1-1/8" thick material. Grain runs horizontal.
- Includes adjustable glides.
- Edges are DeskMakers standard 2MM PVC edgebanding for both TFL and HPL finishes.
- Includes brackets for attaching to desk shell.
- Only 18" deep pedestals can be used.

Bridge Shell Transaction Height

1-7/8" Thick Wall Panels, 1-1/8" Thick Worksurface

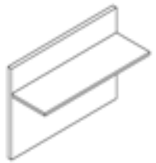

Model Number	Depth	Length	Height	TFL (T)	HPL (H)
19" Deep					
OV-BRT2-1936-?	19	36	40	$2,300	$4,116
OV-BRT2-1942-?	19	42	40	$2,306	$4,126
OV-BRT2-1948-?	19	48	40	$2,313	$4,141
OV-BRT2-1954-?	19	54	40	$2,341	$4,190
OV-BRT2-1960-?	19	60	40	$2,410	$4,313
OV-BRT2-1966-?	19	66	40	$2,554	$4,571
OV-BRT2-1972-?	19	72	40	$2,562	$4,584
24" Deep					
OV-BRT2-2436-?	24	36	40	$2,303	$4,122
OV-BRT2-2442-?	24	42	40	$2,309	$4,132
OV-BRT2-2448-?	24	48	40	$2,316	$4,146
OV-BRT2-2454-?	24	54	40	$2,344	$4,194
OV-BRT2-2460-?	24	60	40	$2,411	$4,314
OV-BRT2-2466-?	24	66	40	$2,557	$4,576
OV-BRT2-2472-?	24	72	40	$2,564	$4,589

- Wall panels are 1-7/8" thick material. Worksurface is 1-1/8" thick material. Grain runs horizontal.
- Includes adjustable glides.
- Edges are DeskMakers standard 2MM PVC edgebanding for both TFL and HPL finishes.
- Includes brackets for attaching to desk and credenza shells.
- Only 18" deep pedestals can be used on 24" deep, no pedestals can be used on 19" deep.

Credenza Shell Transaction Height

1-7/8" Thick Wall Panels, 1-1/8" Thick Worksurface

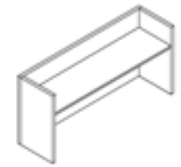

Model Number	Depth	Length	Height	TFL (T)	HPL (H)
24" Deep					
OV-CST2-2460-?	24	60	40	$4,525	$8,098
OV-CST2-2466-?	24	66	40	$4,532	$8,111
OV-CST2-2472-?	24	72	40	$4,538	$8,120
OV-CST2-2478-?	24	78	40	$4,694	$8,399
OV-CST2-2484-?	24	84	40	$4,699	$8,408
OV-CST2-2490-?	24	90	40	$4,973	$8,900
OV-CST2-2496-?	24	96	40	$4,978	$8,910
OV-CST2-2402-?	24	102	40	$6,688	$11,969
OV-CST2-2408-?	24	108	40	$6,695	$11,982
OV-CST2-2414-?	24	114	40	$6,723	$12,031
OV-CST2-2420-?	24	120	40	$6,729	$12,041

- Wall panels are 1-7/8" thick material. Worksurface is 1-1/8" thick material. Grain runs horizontal.
- Includes adjustable glides.
- Edges are DeskMakers standard 2MM PVC edgebanding for both TFL and HPL finishes.
- Includes brackets for attaching to bridge shell. Can be freestanding.
- Credenza shells 78" and longer include a center support panel. Credenza shells over 96" are 2 pieces with a center seam.
- Only 18" deep pedestals can be used.

Desk Shell Transaction Height

3" Thick Wall Panels, 1-1/8" Thick Worksurface

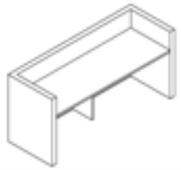

Model Number	Depth	Length	Height	HPL (H)
30" Deep				
OV-DST3-3060-H	30	60	40	$13,149
OV-DST3-3066-H	30	66	40	$13,400
OV-DST3-3072-H	30	72	40	$13,702
OV-DST3-3078-H	30	78	40	$14,201
OV-DST3-3084-H	30	84	40	$14,504
OV-DST3-3090-H	30	90	40	$14,754
OV-DST3-3096-H	30	96	40	$15,055
OV-DST3-3002-H	30	102	40	$18,721
OV-DST3-3008-H	30	108	40	$19,024
OV-DST3-3014-H	30	114	40	$19,275
OV-DST3-3020-H	30	120	40	$19,578
36" Deep				
OV-DST3-3660-H	36	60	40	$13,912
OV-DST3-3666-H	36	66	40	$14,163
OV-DST3-3672-H	36	72	40	$14,464
OV-DST3-3678-H	36	78	40	$14,965
OV-DST3-3684-H	36	84	40	$15,266
OV-DST3-3690-H	36	90	40	$15,574
OV-DST3-3696-H	36	96	40	$15,875
OV-DST3-3602-H	36	102	40	$19,467
OV-DST3-3608-H	36	108	40	$19,768
OV-DST3-3614-H	36	114	40	$20,018
OV-DST3-3620-H	36	120	40	$20,321

- Wall panels are 3" thick in HPL with self edge. Worksurface is 1-1/8" thick material. Grain runs horizontal.
- Includes adjustable glides.
- Edges on worksurface are DeskMakers standard 2MM PVC edgebanding for both TFL and HPL finishes.
- Desk shells 78" and longer include a center support panel. Desk shells over 96" are 2 pieces with a center seam.

Return Shell Transaction Height

3" Thick Wall Panels, 1-1/8" Thick Worksurface

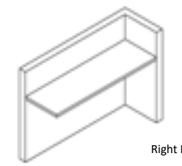

Right Model Shown

Model Number		Depth	Length	Height	HPL (H)
24" Deep					
Left Model	**Right Model**				
OV-RST3-2436-L-H	OV-RST3-2436-R-H	24	36	40	$9,272
OV-RST3-2442-L-H	OV-RST3-2442-R-H	24	42	40	$9,522
OV-RST3-2448-L-H	OV-RST3-2448-R-H	24	48	40	$9,825
OV-RST3-2454-L-H	OV-RST3-2454-R-H	24	54	40	$11,224
OV-RST3-2460-L-H	OV-RST3-2460-R-H	24	60	40	$11,527
OV-RST3-2466-L-H	OV-RST3-2466-R-H	24	66	40	$12,085
OV-RST3-2472-L-H	OV-RST3-2472-R-H	24	72	40	$12,385

- Wall panels are 3" thick in HPL with self edge. Worksurface is 1-1/8" thick material. Grain runs horizontal.
- Includes adjustable glides.
- Edges on worksurface are DeskMakers standard 2MM PVC edgebanding for both TFL and HPL finishes.
- Includes brackets for attaching to desk shell.
- Only 18" deep pedestals can be used.

Bridge Shell Transaction Height

3" Thick Wall Panels, 1-1/8" Thick Worksurface

Model Number	Depth	Length	Height	HPL (H)
19" Deep				
OV-BRT3-1936-H	19	36	40	$4,336
OV-BRT3-1942-H	19	42	40	$4,477
OV-BRT3-1948-H	19	48	40	$4,669
OV-BRT3-1954-H	19	54	40	$5,960
OV-BRT3-1960-H	19	60	40	$6,152
OV-BRT3-1966-H	19	66	40	$6,555
OV-BRT3-1972-H	19	72	40	$6,700
24" Deep				
OV-BRT3-2436-H	24	36	40	$4,477
OV-BRT3-2442-H	24	42	40	$4,617
OV-BRT3-2448-H	24	48	40	$4,763
OV-BRT3-2454-H	24	54	40	$6,055
OV-BRT3-2460-H	24	60	40	$6,247
OV-BRT3-2466-H	24	66	40	$6,650
OV-BRT3-2472-H	24	72	40	$6,796

- Wall panel is 3" thick in HPL with self edge. Worksurface is 1-1/8" thick material. Grain runs horizontal.
- Includes adjustable glides.
- Edges on worksurface are DeskMakers standard 2MM PVC edgebanding for both TFL and HPL finishes.
- Includes brackets for attaching to desk and credenza shells.
- Only 18" deep pedestals can be used on 24" deep, no pedestals can be used on 19" deep.

Credenza Shell Transaction Height

3" Thick Wall Panels, 1-1/8" Thick Worksurface

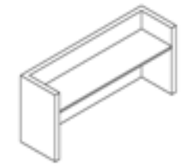

Model Number	Depth	Length	Height	HPL (H)
24" Deep				
OV-CST3-2460-H	24	60	40	$12,597
OV-CST3-2466-H	24	66	40	$12,846
OV-CST3-2472-H	24	72	40	$13,148
OV-CST3-2478-H	24	78	40	$13,646
OV-CST3-2484-H	24	84	40	$13,947
OV-CST3-2490-H	24	90	40	$14,198
OV-CST3-2496-H	24	96	40	$14,572
OV-CST3-2402-H	24	102	40	$18,159
OV-CST3-2408-H	24	108	40	$18,471
OV-CST3-2414-H	24	114	40	$18,721
OV-CST3-2420-H	24	120	40	$19,021

- Wall panels are 3" thick in HPL with self edge. Worksurface is 1-1/8" thick material. Grain runs horizontal.
- Includes adjustable glides.
- Edges on worksurface are DeskMakers standard 2MM PVC edgebanding for both TFL and HPL finishes.
- Includes brackets for attaching to bridge shell. Can be freestanding.
- Credenza shells 78" and longer include a center support panel. Credenza shells over 96" are 2 pieces with a center seam.
- Only 18" deep pedestals can be used.

1-1/8" Thick Laminate Transaction Counter

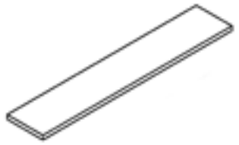

Model Number	Depth	Length	TFL (T)	HPL (H)
OV-LMCT-1260-?	12	60	$309	$553
OV-LMCT-1266-?	12	66	$313	$558
OV-LMCT-1272-?	12	72	$316	$564
OV-LMCT-1278-?	12	78	$319	$569
OV-LMCT-1284-?	12	84	$321	$573
OV-LMCT-1290-?	12	90	$324	$579
OV-LMCT-1296-?	12	96	$327	$584
OV-LMCT-1202-?	12	102	$597	$1,068
OV-LMCT-1208-?	12	108	$599	$1,074
OV-LMCT-1214-?	12	114	$605	$1,080
OV-LMCT-1220-?	12	120	$608	$1,086

- Only available for use with transaction height desk shells.
- Edges are DeskMakers standard 2MM PVC edgebanding for both TFL and HPL finishes.
- Ships with metal brackets to be field installed.

3/8" Thick Glass Transaction Counter

Model Number	Depth	Length	Stand-offs	Glass (G)
OV-GLCT-1230	12	30	4	$1,152
OV-GLCT-1236	12	36	4	$1,194
OV-GLCT-1239	12	39	4	$1,213
OV-GLCT-1242	12	42	4	$1,234
OV-GLCT-1245	12	45	4	$1,255
OV-GLCT-1248	12	48	4	$1,279
OV-GLCT-1251	12	51	6	$1,461
OV-GLCT-1254	12	54	6	$1,645
OV-GLCT-1257	12	57	6	$1,712
OV-GLCT-1260	12	60	6	$1,780
OV-GLCT-1266	12	66	6	$1,818
OV-GLCT-1272	12	72	6	$1,834

- Glass transaction counters are cut exact to size.
- Glass counters are clear tempered glass and have a slightly green tint.
- Ships with metal stand-off supports to be field installed.
- Must be installed onto another transaction counter.

Stack-On Transaction Counter

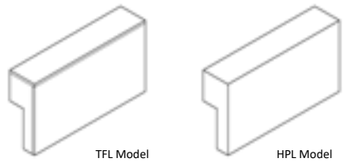

Model Number	Depth	Length	Height	TFL (T)	HPL (H)
OV-STCT-1230-?	12	30	30	$1,753	$3,172
OV-STCT-1236-?	12	36	30	$1,893	$3,603
OV-STCT-1242-?	12	42	30	$2,032	$4,276
OV-STCT-1248-?	12	48	30	$2,174	$5,162
OV-STCT-1254-?	12	54	30	$2,330	$5,899
OV-STCT-1260-?	12	60	30	$2,458	$6,901
OV-STCT-1266-?	12	66	30	$2,620	$7,358
OV-STCT-1272-?	12	72	30	$2,700	$7,814

- Only available for use with all 1-1/8" thick material desk height desk shells.
- Cannot be used on freestanding credenza shells.
- Glass transaction counters can be added to top of stack-on counters.
- Reference chart on page 12 for specification limitations. Peds are required to counter balance certain stack-on sizes.
- Stack-on should always be at least 6" shorter than the surface it sits on.

Stack-On Transaction Counter

Symmetrical L-Shape

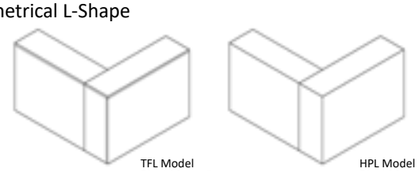

Model Number		Front Width	Depth	Side Width	Height	TFL (T)	HPL (H)
Left Model	**Right Model**						
OV-STCT-3030-L-?	OV-STCT-3030-R-?	30	12	18	30	$3,013	$6,344
OV-STCT-3636-L-?	OV-STCT-3636-R-?	36	12	24	30	$3,423	$7,207
OV-STCT-4242-L-?	OV-STCT-4242-R-?	42	12	30	30	$4,062	$8,551
OV-STCT-4848-L-?	OV-STCT-4848-R-?	48	12	36	30	$4,904	$10,326
OV-STCT-5454-L-?	OV-STCT-5454-R-?	54	12	42	30	$5,604	$11,799
OV-STCT-6060-L-?	OV-STCT-6060-R-?	60	12	48	30	$6,556	$13,799
OV-STCT-6666-L-?	OV-STCT-6666-R-?	66	12	54	30	$6,990	$14,714
OV-STCT-7272-L-?	OV-STCT-7272-R-?	72	12	60	30	$7,423	$15,628

- Only available for use with all 1-1/8" thick material desk height desk shells.
- Ships in 2 pieces. Grain will not be matched at seams.
- Glass transaction counters can be added to top of stack-on counters.
- Reference chart on page 12 for specification limitations. Peds are required to counter balance certain stack-on sizes.
- Stack-on should always be at least 6" shorter than the surface it sits on.

Stack-On Transaction Counter

Non-Symmetrical L-Shape

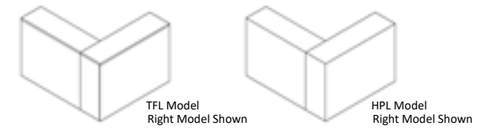

Model Number		Front Width	Depth	Side Width	Height	TFL (T)	HPL (H)
30" Deep							
Left Model	**Right Model**						
OV-STCT-3036-L-?	OV-STCT-3036-R-?	36	12	18	30	$3,646	$6,774
OV-STCT-3042-L-?	OV-STCT-3042-R-?	42	12	18	30	$3,785	$7,448
OV-STCT-3048-L-?	OV-STCT-3048-R-?	48	12	18	30	$3,927	$8,334
OV-STCT-3054-L-?	OV-STCT-3054-R-?	54	12	18	30	$4,083	$9,070
OV-STCT-3060-L-?	OV-STCT-3060-R-?	60	12	18	30	$4,211	$10,072
OV-STCT-3066-L-?	OV-STCT-3066-R-?	66	12	18	30	$4,374	$10,528
OV-STCT-3072-L-?	OV-STCT-3072-R-?	72	12	18	30	$4,454	$10,986
36" Deep							
OV-STCT-3642-L-?	OV-STCT-3642-R-?	42	12	24	30	$3,926	$7,879
OV-STCT-3648-L-?	OV-STCT-3648-R-?	48	12	24	30	$4,066	$8,766
OV-STCT-3654-L-?	OV-STCT-3654-R-?	54	12	24	30	$4,223	$9,503
OV-STCT-3660-L-?	OV-STCT-3660-R-?	60	12	24	30	$4,351	$10,503
OV-STCT-3666-L-?	OV-STCT-3666-R-?	66	12	24	30	$4,514	$10,960
OV-STCT-3672-L-?	OV-STCT-3672-R-?	72	12	24	30	$4,594	$11,418
42" Deep							
OV-STCT-4248-L-?	OV-STCT-4248-R-?	48	12	30	30	$4,205	$9,438
OV-STCT-4254-L-?	OV-STCT-4254-R-?	54	12	30	30	$4,362	$10,175
OV-STCT-4260-L-?	OV-STCT-4260-R-?	60	12	30	30	$4,490	$11,175
OV-STCT-4266-L-?	OV-STCT-4266-R-?	66	12	30	30	$4,651	$11,633
OV-STCT-4272-L-?	OV-STCT-4272-R-?	72	12	30	30	$4,733	$12,090
48" Deep							
OV-STCT-4854-L-?	OV-STCT-4854-R-?	54	12	36	30	$4,503	$11,062
OV-STCT-4860-L-?	OV-STCT-4860-R-?	60	12	36	30	$4,632	$12,062
OV-STCT-4866-L-?	OV-STCT-4866-R-?	66	12	36	30	$4,793	$12,520
OV-STCT-4872-L-?	OV-STCT-4872-R-?	72	12	36	30	$4,875	$12,976
54" Deep							
OV-STCT-5460-L-?	OV-STCT-5460-R-?	60	12	42	30	$4,788	$12,799
OV-STCT-5466-L-?	OV-STCT-5466-R-?	66	12	42	30	$4,950	$13,257
OV-STCT-5472-L-?	OV-STCT-5472-R-?	72	12	42	30	$5,030	$13,714
60" Deep							
OV-STCT-6066-L-?	OV-STCT-6066-R-?	66	12	48	30	$5,078	$14,257
OV-STCT-6072-L-?	OV-STCT-6072-R-?	72	12	48	30	$5,158	$14,714
66" Deep							
OV-STCT-6672-L-?	OV-STCT-6672-R-?	72	12	54	30	$5,321	$15,172

- Only available for use with all 1-1/8" thick material desk height desk shells.
- Ships in 2 pieces. Grain will not be matched at seams. Glass transaction counters can be added to top of stack-on counters.
- Reference chart on page 12 for specification limitations. Peds are required to counter balance certain stack-on sizes.
- Stack-on should always be at least 6" shorter than the surface it sits on.

Hang-On Transaction Counter

1-7/8" Thick

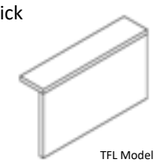
TFL Model

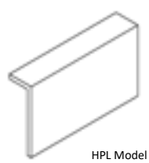
HPL Model

TFL Edge Detail

HPL Edge Detail

Model Number	Depth	Length	Height	TFL (T)	HPL (H)
OV-HGCT-1230-?	12	30	34	$1,415	$2,755
OV-HGCT-1236-?	12	36	34	$1,507	$2,936
OV-HGCT-1242-?	12	42	34	$1,614	$3,144
OV-HGCT-1248-?	12	48	34	$1,754	$3,417
OV-HGCT-1254-?	12	54	34	$2,065	$4,020
OV-HGCT-1260-?	12	60	34	$2,101	$4,093
OV-HGCT-1266-?	12	66	34	$2,139	$4,165
OV-HGCT-1272-?	12	72	34	$2,176	$4,236

- Hang-on counters are 1-7/8" thick material.
- Only available for use with transaction height desk shells.
- Edges on TFL counter are DeskMakers standard 2MM PVC edgebanding and self edge on HPL counters.

Angled Hang-On Transaction Counter

1-7/8" Thick

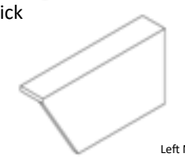
Left Model Shown

Model Number		Depth	Length	Height	TFL (T)	HPL (H)
Left Model	**Right Model**					
OV-AHCT-1230-L-H	OV-AHCT-1230-R-H	12	30	34	N/A	$2,950
OV-AHCT-1236-L-H	OV-AHCT-1236-R-H	12	36	34	N/A	$3,296
OV-AHCT-1242-L-H	OV-AHCT-1242-R-H	12	42	34	N/A	$3,736
OV-AHCT-1248-L-H	OV-AHCT-1248-R-H	12	48	34	N/A	$4,079
OV-AHCT-1254-L-H	OV-AHCT-1254-R-H	12	54	34	N/A	$4,561
OV-AHCT-1260-L-H	OV-AHCT-1260-R-H	12	60	34	N/A	$4,884
OV-AHCT-1266-L-H	OV-AHCT-1266-R-H	12	66	34	N/A	$5,121
OV-AHCT-1272-L-H	OV-AHCT-1272-R-H	12	72	34	N/A	$5,449

- Hang-on counters are 1-7/8" thick material.
- Only available for use with transaction height desk shells.
- Edges are self edge on HPL counters.

Shroud Transaction Counter

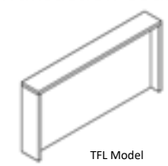
TFL Model

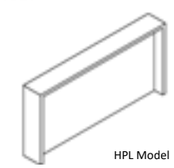
HPL Model

TFL Edge Detail

HPL Edge Detail

Model Number	Depth	Length	Height	TFL (T)	HPL (H)
OV-SHCT-1264-?	12	64	42	$4,466	$8,228
OV-SHCT-1270-?	12	70	42	$4,519	$8,325
OV-SHCT-1276-?	12	76	42	$4,571	$8,421
OV-SHCT-1282-?	12	82	42	$4,625	$8,519
OV-SHCT-1288-?	12	88	42	$4,677	$8,615
OV-SHCT-1294-?	12	94	42	$4,865	$8,962
OV-SHCT-1200-?	12	100	42	$5,581	$10,282
OV-SHCT-1206-?	12	106	42	$6,236	$11,487
OV-SHCT-1212-?	12	112	42	$6,289	$11,586
OV-SHCT-1218-?	12	118	42	$6,343	$11,684
OV-SHCT-1224-?	12	124	42	$6,396	$11,783

- Only available for use with all 1-1/8" thick material desk height desk shells.
- Shroud counters are 1-7/8" thick material on the top and sides. Full modesty is 3/4" thick material. Grain runs horizontal.
- Includes adjustable glides.
- Edges on TFL counter are DeskMakers standard 2MM PVC edgebanding and self edge on HPL counters.
- Full height front panel is inset 6".
- Shrouds over 96" are 2 pieces with a center seam. Grain will not line up.

Accent Panels

The Overture Collection features several accent panel types that can be applied to the desk shells to create stylish and unique solutions in a few easy steps. These panels can also be paired with the Height Adjustable Shells (pages 50 &56).

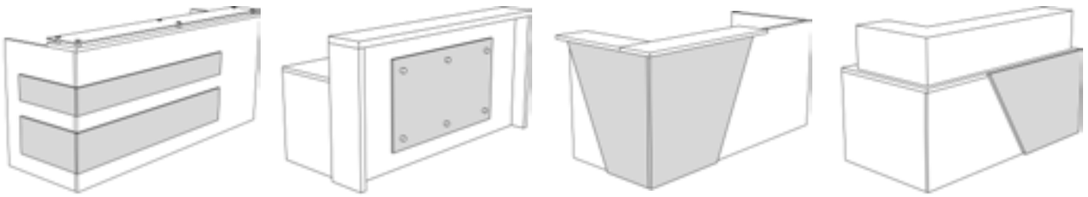

Applied Laminate Accent Panels

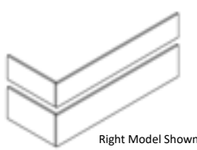

Right Model Shown

Model Number		Depth	Length	TFL (T)	HPL (H)
30" Deep					
Left Model	**Right Model**				
OV-APPL-2136-L-?	OV-APPL-2136-R-?	21	36	$1,043	$1,866
OV-APPL-2142-L-?	OV-APPL-2142-R-?	21	42	$1,063	$1,900
OV-APPL-2148-L-?	OV-APPL-2148-R-?	21	48	$1,084	$1,937
OV-APPL-2154-L-?	OV-APPL-2154-R-?	21	54	$1,103	$1,974
OV-APPL-2160-L-?	OV-APPL-2160-R-?	21	60	$1,124	$2,011
OV-APPL-2166-L-?	OV-APPL-2166-R-?	21	66	$1,144	$2,048
OV-APPL-2172-L-?	OV-APPL-2172-R-?	21	72	$1,165	$2,085
OV-APPL-2178-L-?	OV-APPL-2178-R-?	21	78	$1,204	$2,154
OV-APPL-2184-L-?	OV-APPL-2184-R-?	21	84	$1,225	$2,193
OV-APPL-2190-L-?	OV-APPL-2190-R-?	21	90	$1,246	$2,231
OV-APPL-2196-L-?	OV-APPL-2196-R-?	21	96	$1,269	$2,269
36" Deep					
Left Model	**Right Model**				
OV-APPL-2736-L-?	OV-APPL-2736-R-?	27	36	$1,063	$1,900
OV-APPL-2742-L-?	OV-APPL-2742-R-?	27	42	$1,084	$1,937
OV-APPL-2748-L-?	OV-APPL-2748-R-?	27	48	$1,103	$1,974
OV-APPL-2754-L-?	OV-APPL-2754-R-?	27	54	$1,124	$2,011
OV-APPL-2760-L-?	OV-APPL-2760-R-?	27	60	$1,144	$2,048
OV-APPL-2766-L-?	OV-APPL-2766-R-?	27	66	$1,165	$2,085
OV-APPL-2772-L-?	OV-APPL-2772-R-?	27	72	$1,185	$2,120
OV-APPL-2778-L-?	OV-APPL-2778-R-?	27	78	$1,225	$2,191
OV-APPL-2784-L-?	OV-APPL-2784-R-?	27	84	$1,245	$2,229
OV-APPL-2790-L-?	OV-APPL-2790-R-?	27	90	$1,267	$2,268
OV-APPL-2796-L-?	OV-APPL-2796-R-?	27	96	$1,288	$2,306

- TFL and HPL accent panels are 3/4" thick material. Grain runs horizontal. Top panel is 9", lower panel is 12" tall.
- Ships installed.
- Edges are DeskMakers standard 2MM PVC edgebanding for both TFL and HPL finishes.

Accent Panels on Stand-Offs

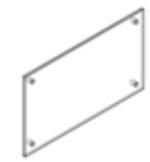

Model Number	Length	Height	TFL (T)	HPL (H)	Acrylic (A)
OV-ACPL-2812-?	12	28	$1,022	$1,720	$2,074
OV-ACPL-2818-?	18	28	$1,027	$1,732	$2,126
OV-ACPL-2824-?	24	28	$1,034	$1,742	$2,180
OV-ACPL-2830-?	30	28	$1,041	$1,754	$2,233
OV-ACPL-2836-?	36	28	$1,048	$1,764	$2,286
OV-ACPL-2842-?	42	28	$1,054	$1,774	$2,338
OV-ACPL-2848-?	48	28	$1,124	$1,893	$2,392
OV-ACPL-2854-?	54	28	$1,437	$2,420	$2,726
OV-ACPL-2860-?	60	28	$1,444	$2,432	$2,778
OV-ACPL-2866-?	66	28	$1,451	$2,445	$2,835
OV-ACPL-2872-?	72	28	$1,458	$2,457	$2,887
OV-ACPL-2878-?	78	28	$1,465	$2,469	$2,940
OV-ACPL-2884-?	84	28	$1,472	$2,482	$2,994
OV-ACPL-2890-?	90	28	$1,760	$2,965	$3,326
OV-ACPL-2896-?	96	28	$1,767	$2,979	$3,380

- Acrylic is 3/16" thick frosted acrylic material.
- Ships with metal stand-off supports to be field installed.
- TFL and HPL accent panels are 3/4" thick material. Grain runs horizontal.
- Edges are DeskMakers standard 2MM PVC edgebanding for both TFL and HPL finishes.

Angled Laminate Accent Panels

Model Number	Length	Height	TFL (T)	HPL (H)
Desk Height				
OV-APFH-2936-?	36-18	29	$347	$587
OV-APFH-2942-?	42-24	29	$411	$707
OV-APFH-2948-?	48-30	29	$474	$827
OV-APFH-2954-?	54-36	29	$476	$829
OV-APFH-2960-?	60-42	29	$478	$831
OV-APFH-2966-?	66-48	29	$480	$834
OV-APFH-2972-?	72-54	29	$481	$836
Transaction Height				
OV-APFH-4036-?	36-18	40	$433	$684
OV-APFH-4042-?	42-24	40	$455	$757
OV-APFH-4048-?	48-30	40	$476	$829
OV-APFH-4054-?	54-36	40	$479	$833
OV-APFH-4060-?	60-42	40	$481	$836
OV-APFH-4066-?	66-48	40	$483	$838
OV-APFH-4072-?	72-54	40	$484	$839

- TFL and HPL accent panels are 1 1/8" thick material. Grain runs horizontal.
- Edges are DeskMakers standard 2MM PVC edgebanding for both TFL and HPL finishes.

Box/Box/File Surface Supporting Pedestal

Model Number	Width	Depth	Height	Price
SS-PDBF-1816	16	18	28	$1,029
SS-PDBF-2216	16	22	28	$1,066

- Pedestal is finished on all sides and can easily be moved in the field.
- Lock included.

File/File Surface Supporting Pedestal

Model Number	Width	Depth	Height	Price
SS-PDFF-1816	16	18	28	$1,029
SS-PDFF-2216	16	22	28	$1,066

- Pedestal is finished on all sides and can easily be moved in the field.
- Lock included.

Box/Box/Box/Box Surface Supporting Pedestal

Model Number	Width	Depth	Height	Price
SS-PD4B-1816	16	18	28	$1,219
SS-PD4B-2216	16	22	28	$1,257

- Pedestal is finished on all sides and can easily be moved in the field.
- Lock included.

Shelf/Box/File Surface Supporting Pedestal

Model Number	Width	Depth	Height	Price
SS-PDSF-1816	16	18	28	$1,085
SS-PDSF-2216	16	22	28	$1,123

- Pedestal is finished on all sides and can easily be moved in the field.
- Lock included.

Bookshelf Pedestal

Model Number	Width	Depth	Height	Price
SS-PDBS-1536	36	15	28	$699

- Pedestal is finished on all sides and can easily be moved in the field.

Lateral File Surface Supporting Pedestal

Model Number	Width	Depth	Height	Price
SS-PDLF-1832	32	18	28	$1,302
SS-PDLF-1836	36	18	28	$1,316
SS-PDLF-2232	32	22	28	$1,353
SS-PDLF-2236	36	22	28	$1,362

- Pedestal is finished on all sides and can easily be moved in the field.
- Lock included.

File Center Surface Supporting Pedestal

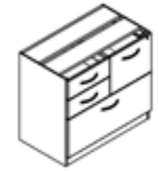

Model Number	Width	Depth	Height	Price
SS-PDFC-1832	32	18	28	$1,496
SS-PDFC-2232	32	22	28	$1,506

- Pedestal is finished on all sides and can easily be moved in the field.
- Box drawers do not lock. Box drawers are always placed on the left of pedestal. File drawers lock.

Storage Cabinet Surface Supporting Pedestal

Model Number	Width	Depth	Height	Price
SS-PDSC-1832	32	18	28	$1,162
SS-PDSC-1836	36	18	28	$1,174
SS-PDSC-2232	32	22	28	$1,211
SS-PDSC-2236	36	22	28	$1,221

- Pedestal is finished on all sides and can easily be moved in the field.
- Single shelf included. For extra shelf -- use OP-SHLF-2 for $178.
- Hinges open to 90 degrees only. Lock optional.
- For lock, add OP-LOCK-ADD for $122.

Straight Riser for Desk

Model Number	Depth	Width	Height	
SS-RISR-1248-??	12	48	14	$508
SS-RISR-1260-??	12	60	14	$660
SS-RISR-1266-??	12	66	14	$800
SS-RISR-1272-??	12	72	14	$848
SS-RISR-1278-??	12	78	14	$997

- NOTE: Actual width varies by series to allow for wood moldings on desk or credenza.
- You must order riser in same series as desk, credenza or return on which it will be sitting.
- Riser should be at least 6" shorter than the surface it sits on.

Return Riser

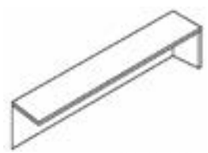

Right Model Shown

Model Number		Depth	Width	Height	
Left Model	Right Model				
SS-RRSR-1236-L-??	SS-RRSR-1236-R-??	12	36	14	$444
SS-RRSR-1242-L-??	SS-RRSR-1242-R-??	12	42	14	$453
SS-RRSR-1248-L-??	SS-RRSR-1248-R-??	12	48	14	$472
SS-RRSR-1260-L-??	SS-RRSR-1260-R-??	12	60	14	$641
SS-RRSR-1272-L-??	SS-RRSR-1272-R-??	12	72	14	$831
SS-RRSR-1278-L-??	SS-RRSR-1278-R-??	12	78	14	$980

- NOTE: Actual width varies by series to allow for wood moldings on desk or credenza.
- You must order riser in same series as desk, credenza or return on which it will be sitting.
- Riser should be at least 6" shorter than the surface it sits on.

One-Piece Top Corner Riser

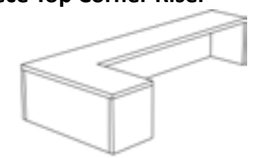

Left Model Shown

Model Number		Depth	Width	Height	
Left Model	Right Model				
SS-RSRC-7230-L-??	SS-RSRC-7230-R-??	12-30	72	14	$1,130
SS-RSRC-7236-L-??	SS-RSRC-7236-R-??	12-36	72	14	$1,204

- Surface depth is 12" with no overhang on approach side.
- NOTE: Actual width varies by series to allow for wood moldings on desk or credenza.
- You must order riser in same series as desk, credenza or return on which it will be sitting.
- Riser should be at least 6" shorter than the surface it sits on

Height Adjustable Overture

Configurations

Height adjustability can be incorporated into an Overture Reception Desk in multiple ways. Below are some examples.

Desk Height Height Adjustable Shell

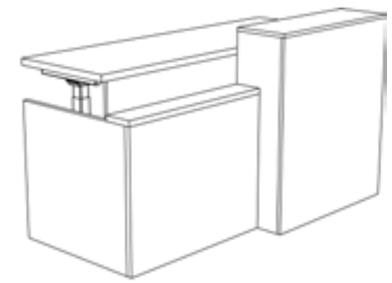

Transaction Height Height Adjustable Shell

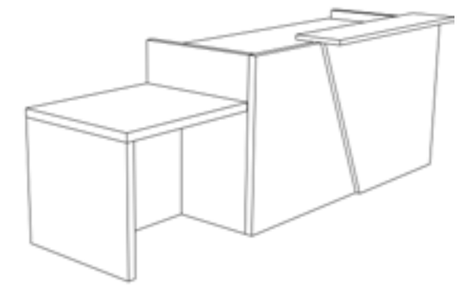

3- Leg Height Adjustable Desk

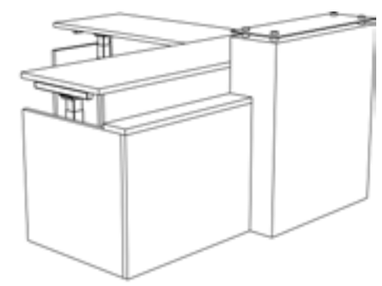

Height Adjustable Bridge

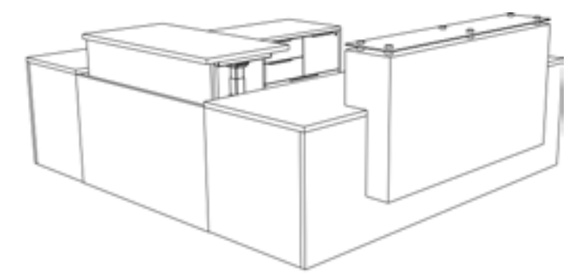

Height Adjustable Desk w/ Fixed Bridge

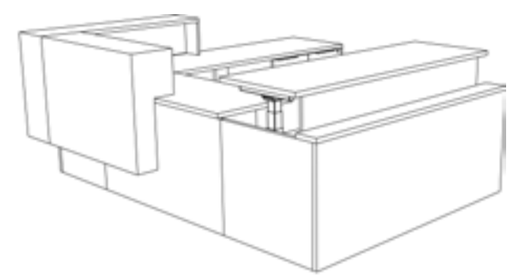

Height Adjustable Desk with Shroud

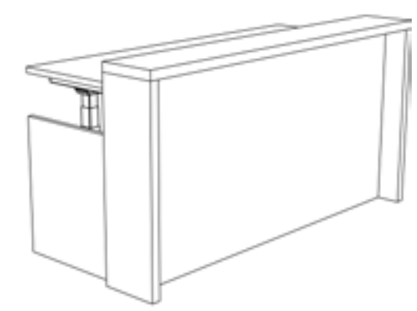

reception

Height Adjustable Overture Desk Height Series

All 1-1/8" Material

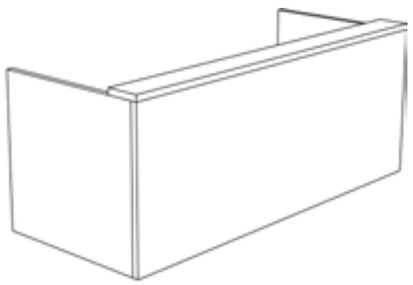

Features

- All 1-1/8" thick material.
- TFL or HPL with 2mm PVC edges in DeskMakers standard colors.
- Free-standing desk shell unit, work surface to be specified separately. See Pg. 61.
- Can be used with any DeskMakers Height Adjustable Base. See Pg 62-72.
- Grommets or small electrical units can be installed on front shelf portion or main worksurface. See electrical pricer for details.

Desk Shell

- 30" and 36" depths.
- Lengths 60" to 84" in 6" increments.
- Front shelf surface is 29-1/8" high. Levelers add 1/2" to the height.

Return Shell

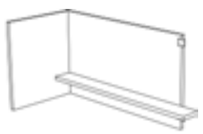

- 24" deep.
- Lengths 37" - 85" in 6" increments.
- Top to be specified separately.

Bridge

- 24" or 30"deep.
- Lengths 38" - 86" in 6" increments.
- Top to be specified separately.

Fixed Return Shell

- 19" and 24" depths.
- Lengths 36" - 72" in 6" increments.
- No storage pedestals on 19" deep.

Fixed Bridge

- 19" and 24" depths.
- Lengths 36" to 72" - 6" increments.
- No storage pedestals on 19" deep.

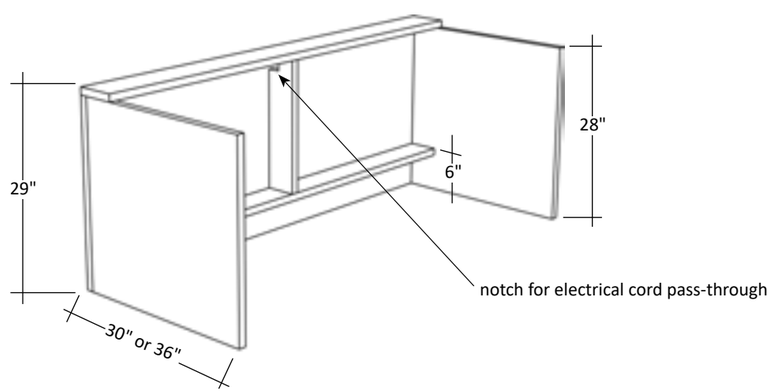

Grain Direction

- Grain Direction runs horizontal.

Desk Shell

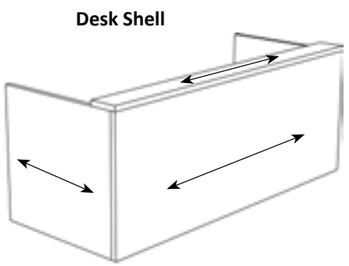

Return

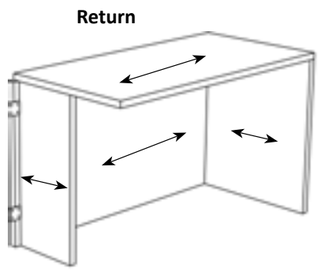

Bridge

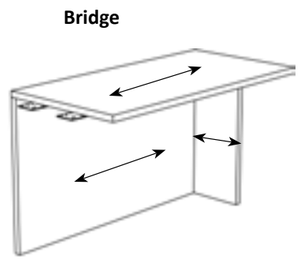

reception

Height Adjustable Overture Transaction Height Series

1-7/8" Thick Wall Panels, 1-1/8" Thick Worksurface

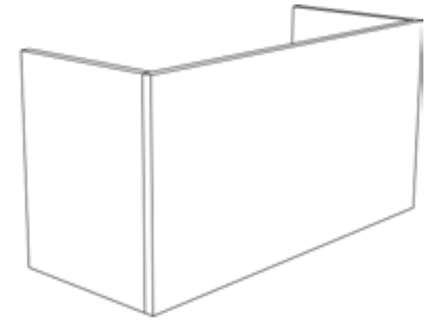

Features

- 1-7/8" thick front panel and side panels.
- TFL or HPL with 2mm PVC edges in DeskMakers standard colors.
- Free-standing desk shell unit, work surface to be specified separately. See Pg. 61.
- Can be used with any DeskMakers Height Adjustable Base. See Pg 62-72.
- Grommets or small electrical units can be installed on ledge portion or main worksurface. See electrical pricer for details.

Desk Shell

- 32" and 38" depths.
- Lengths 60" to 90" in 6" increments.
- Front and side panels are 40" high. Levelers add 1/2" to the height.

Return Shell

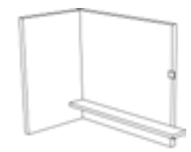

- 24" deep.
- Lengths 39" - 87" in 6" increments.
- Top to be specified separately.

Bridge Shell

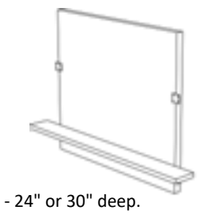

- 24" or 30" deep.
- Lengths 38" - 86" in 6" increments.
- Top to be specified separately.

Fixed Return

- 19" and 24" depths.
- Lengths 39" - 75" in 6" increments.
- No storage pedestals on 19" deep.

Fixed Bridge

- 19" and 24" depths.
- Lengths 37" to 73" - 6" increments.
- No storage pedestals on 19" deep.

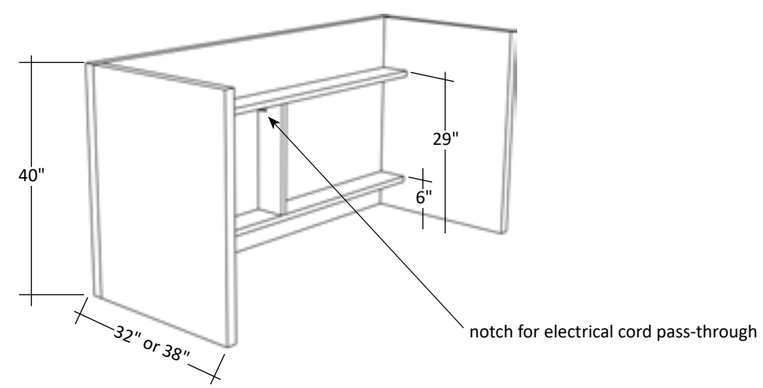

Grain Direction

- Grain Direction runs horizontal.

Desk Shell

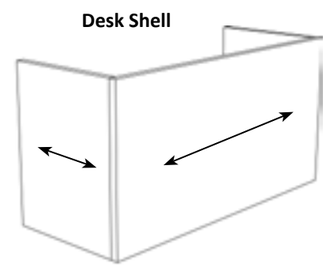

Return

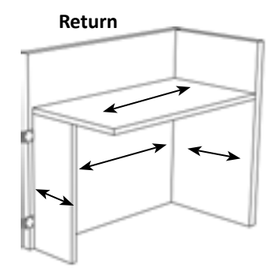

Bridge

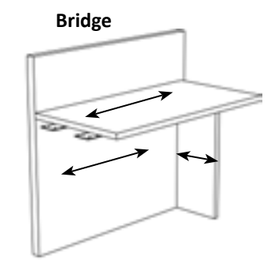

Full Height Transaction Counter

For use with Desk Height Height Adjustable Desk Shells

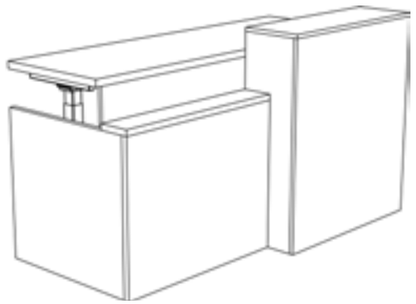

Features

- 12" deep, 6" overlaps worksurface.
- 41" high, 12" above worksurface.
- TFL has 2mm PVC edges in DeskMakers standard colors. HPL has self edge.
- Can add glass transaction counter on top.
- Not available with 1-7/8" thick worksurfaces or transaction height desks.
- TFL version is all 3/4" thick material, with visible seams.
- HPL version has 1-1/8" thick top and sides.
- Unit has adjustable glides for leveling where it rests on the floor. It is not self-supporting, cannot be used as freestanding furniture.

Placement

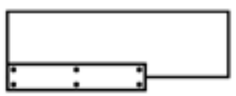

Right Placement

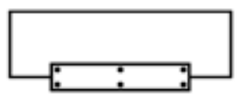

Center Placement

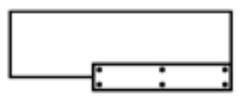

Left Placement

Grain Direction

- Grain Direction runs horizontal.
- Grain direction on two piece L-Shape counters will not line up.

HPL

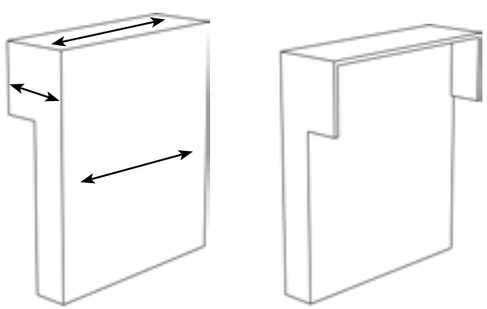

TFL

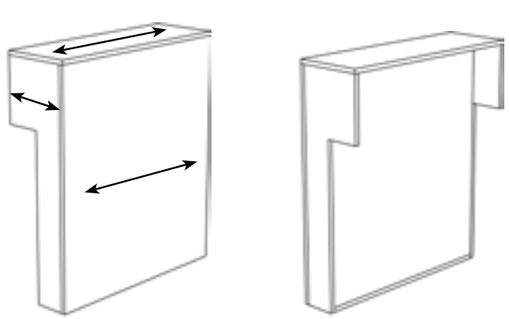

Other Counters & Accessories

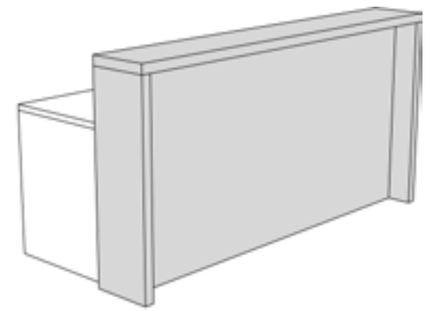

Shroud Transaction Counter

- The Overture Shroud Transaction Counter can also be paired with the Height Adjustable Desk Height Desk Shell.
- See Page 13 for Product Details and Page 37 for Pricing.

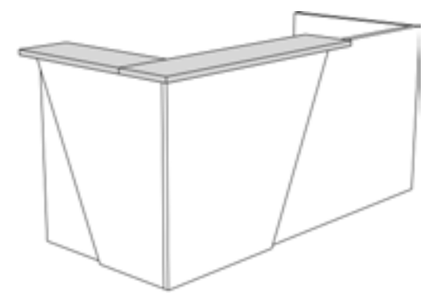

Laminate Transaction Counter

- The Overture Laminate Transaction Counter can also be paired with the Height Adjustable Transaction Height Desk Shell.
- When installed on center, counter will not conflict with raised worksurface.
- See Page 32 for Pricing.

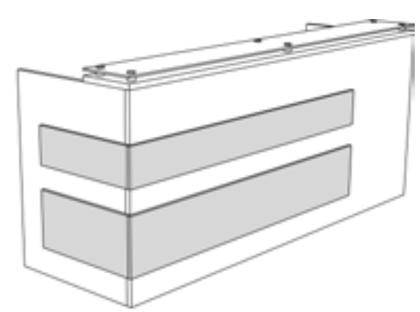

Decorative Accent Panels

- Decorative Accent Panels can also be applied to the Height Adjustable Transaction Height Desk Shells
- See Page 38-39 for Pricing.

Desk Shell Desk Height

All 1-1/8" Thick Material

Model Number	Depth	Length	Height	Top	TFL (T)	HPL (H)
30" Deep				(specified separately)		
OV-ASD1-3060-?	30	60	29	23x60	$914	$2,097
OV-ASD1-3066-?	30	66	29	23x66	$920	$2,103
OV-ASD1-3072-?	30	72	29	23x72	$925	$2,109
OV-ASD1-3078-?	30	78	29	23x78	$935	$2,119
OV-ASD1-3084-?	30	84	29	23x84	$941	$2,125
36" Deep						
OV-ASD1-3660-?	36	60	29	29x60	$918	$2,101
OV-ASD1-3666-?	36	66	29	29x66	$924	$2,107
OV-ASD1-3672-?	36	72	29	29x72	$929	$2,113
OV-ASD1-3678-?	36	78	29	29x78	$939	$2,123
OV-ASD1-3684-?	36	84	29	29x84	$945	$2,129

- All 1-1/8" thick material with horizontal grain.
- Includes adjustable glides.
- Edges are DeskMakers standard 2MM PVC edgebanding for both TFL and HPL finishes.
- To be completed with a worktop and height adjustable base. See page 61 for worktops, and pages 68-72 for base options.
- Can be paired with Overture Full Height Stack-On (Pg 55) or Shroud Transaction Counter (Pg 37).

Return Shell Desk Height

All 1-1/8" Thick Material

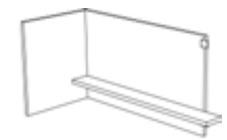

Left Model Shown

Model Number		Depth	Length	Height	Top	TFL (T)	HPL (H)
24" Deep					(specified separately)		
Left Model	**Right Model**						
OV-ARD1-2436-L-?	OV-ARD1-2436-R-?	24	37	28	24x36	$506	$1,098
OV-ARD1-2442-L-?	OV-ARD1-2442-R-?	24	43	28	24x42	$510	$1,102
OV-ARD1-2448-L-?	OV-ARD1-2448-R-?	24	49	28	24x48	$515	$1,107
OV-ARD1-2454-L-?	OV-ARD1-2454-R-?	24	55	28	24x54	$519	$1,111
OV-ARD1-2460-L-?	OV-ARD1-2460-R-?	24	61	28	24x60	$523	$1,115
OV-ARD1-2466-L-?	OV-ARD1-2466-R-?	24	67	28	24x66	$528	$1,120
OV-ARD1-2472-L-?	OV-ARD1-2472-R-?	24	73	28	24x72	$807	$1,991
OV-ARD1-2478-L-?	OV-ARD1-2478-R-?	24	79	28	24x78	$811	$1,995
OV-ARD1-2484-L-?	OV-ARD1-2484-R-?	24	85	28	24x84	$815	$1,999
30" Deep							
Left Model	**Right Model**						
OV-ARD1-3036-L-?	OV-ARD1-3036-R-?	30	37	28	30x36	$508	$1,100
OV-ARD1-3042-L-?	OV-ARD1-3042-R-?	30	43	28	30x42	$512	$1,104
OV-ARD1-3048-L-?	OV-ARD1-3048-R-?	30	49	28	30x48	$517	$1,109
OV-ARD1-3054-L-?	OV-ARD1-3054-R-?	30	55	28	30x54	$521	$1,113
OV-ARD1-3060-L-?	OV-ARD1-3060-R-?	30	61	28	30x60	$525	$1,117
OV-ARD1-3066-L-?	OV-ARD1-3066-R-?	30	67	28	30x66	$805	$1,989
OV-ARD1-3072-L-?	OV-ARD1-3072-R-?	30	73	28	30x72	$809	$1,993
OV-ARD1-3078-L-?	OV-ARD1-3078-R-?	30	79	28	30x78	$813	$1,997
OV-ARD1-3084-L-?	OV-ARD1-3084-R-?	30	85	28	30x84	$817	$2,001

- All 1-1/8" thick material with horizontal grain.
- Includes adjustable glides.
- Edges are DeskMakers standard 2MM PVC edgebanding for both TFL and HPL finishes.
- Includes brackets for attaching to desk shell. Cannot be used independently.
- To be completed with a worktop and height adjustable base. See page 61 for worktops, and pages 68-72 for base options.
- 36" Return for use with 3-Leg base only. Returns over 60" to be used as independent height adjustable worksurfaces only.

Fixed Return Desk Height

All 1-1/8" Thick Material

Left Model Shown

Model Number		Depth	Length	Height	Top	TFL (T)	HPL (H)
24" Deep							
Left Model	**Right Model**						
OV-FRD1-1936-L-?	OV-FRD1-1936-R-?	19	37	29	19x36	$537	$1,129
OV-FRD1-1942-L-?	OV-FRD1-1942-R-?	19	43	29	19x42	$541	$1,133
OV-FRD1-1948-L-?	OV-FRD1-1948-R-?	19	49	29	19x48	$820	$2,004
OV-FRD1-1954-L-?	OV-FRD1-1954-R-?	19	55	29	19x54	$826	$2,010
OV-FRD1-1960-L-?	OV-FRD1-1960-R-?	19	61	29	19x60	$830	$2,014
OV-FRD1-1966-L-?	OV-FRD1-1966-R-?	19	67	29	19x66	$834	$2,018
OV-FRD1-1972-L-?	OV-FRD1-1972-R-?	19	73	29	19x72	$841	$2,024
30" Deep							
Left Model	**Right Model**						
OV-FRD1-2436-L-?	OV-FRD1-2436-R-?	24	37	29	24x36	$541	$1,132
OV-FRD1-2442-L-?	OV-FRD1-2442-R-?	24	43	29	24x42	$819	$2,003
OV-FRD1-2448-L-?	OV-FRD1-2448-R-?	24	49	29	24x48	$823	$2,007
OV-FRD1-2454-L-?	OV-FRD1-2454-R-?	24	55	29	24x54	$830	$2,013
OV-FRD1-2460-L-?	OV-FRD1-2460-R-?	24	61	29	24x60	$834	$2,017
OV-FRD1-2466-L-?	OV-FRD1-2466-R-?	24	67	29	24x66	$838	$2,022
OV-FRD1-2472-L-?	OV-FRD1-2472-R-?	24	73	29	24x72	$844	$2,028

- All 1-1/8" thick material with horizontal grain.
- Includes adjustable glides.
- Edges are DeskMakers standard 2MM PVC edgebanding for both TFL and HPL finishes.
- Modesty extends 1" past worktop to allow return to connect to height adjustable shell and maintain gap for moving worksurface.
- Half leg support on side abutting height adjustable desk.
- Storage peds cannot be used under 19" deep returns.

Bridge Shell Desk Height

All 1-1/8" Thick Material

Model Number	Depth	Length	Height	Top	TFL (T)	HPL (H)
				(specified separately)		
OV-ABD1-0638-?	6	38	28	24x36	$488	$1,079
OV-ABD1-0644-?	6	44	28	24x42 or 30x42	$491	$1,083
OV-ABD1-0650-?	6	50	28	24x48 or 30x48	$495	$1,087
OV-ABD1-0656-?	6	56	28	24x54 or 30x54	$499	$1,091
OV-ABD1-0662-?	6	62	28	24x60 or 30x60	$503	$1,095
OV-ABD1-0668-?	6	68	28	24x66 or 30x66	$507	$1,099
OV-ABD1-0674-?	6	74	28	24x72 or 30x72	$513	$1,105
OV-ABD1-0680-?	6	80	28	24x78 or 30x78	$517	$1,109
OV-ABD1-0686-?	6	86	28	24x84 or 30x84	$795	$1,979

- All 1-1/8" thick material with horizontal grain.
- Includes adjustable glides.
- Edges are DeskMakers standard 2MM PVC edgebanding for both TFL and HPL finishes.
- Includes brackets for attaching to desk/credenza shells. Cannot be used independently.
- To be completed with a worktop and height adjustable base. See page 61 for worktops, and pages 68-72 for base options.
- Bridges are sized 2" larger than the worktop to be used to allow for 1" clearance on either side of the moving top.
- 36" Bridge for use with 3-Leg base only. Bridges over 60" to be used as independent height adjustable worksurfaces only.

Fixed Bridge Desk Height

All 1-1/8" Thick Material

Left Model Shown

Model Number		Depth	Length	Height	Top	TFL (T)	HPL (H)
19" Deep							
Left Model	**Right Model**						
OV-FBD1-1936-L-?	OV-FBD1-1936-R-?	19	37	29	19x36	$520	$1,112
OV-FBD1-1942-L-?	OV-FBD1-1942-R-?	19	43	29	19x42	$524	$1,116
OV-FBD1-1948-L-?	OV-FBD1-1948-R-?	19	49	29	19x48	$530	$1,122
OV-FBD1-1954-L-?	OV-FBD1-1954-R-?	19	55	29	19x54	$534	$1,126
OV-FBD1-1960-L-?	OV-FBD1-1960-R-?	19	61	29	19x60	$813	$1,997
OV-FBD1-1966-L-?	OV-FBD1-1966-R-?	19	67	29	19x66	$817	$2,001
OV-FBD1-1972-L-?	OV-FBD1-1972-R-?	19	73	29	19x72	$823	$2,007
24" Deep							
OV-FRD1-2436-L-?	OV-FRD1-2436-R-?	24	37	29	24x36	$541	$1,132
OV-FRD1-2442-L-?	OV-FRD1-2442-R-?	24	43	29	24x42	$819	$2,003
OV-FRD1-2448-L-?	OV-FRD1-2448-R-?	24	49	29	24x48	$823	$2,007
OV-FRD1-2454-L-?	OV-FRD1-2454-R-?	24	55	29	24x54	$830	$2,013
OV-FRD1-2460-L-?	OV-FRD1-2460-R-?	24	61	29	24x60	$834	$2,017
OV-FRD1-2466-L-?	OV-FRD1-2466-R-?	24	67	29	24x66	$838	$2,022
OV-FRD1-2472-L-?	OV-FRD1-2472-R-?	24	73	29	24x72	$844	$2,028

- All 1-1/8" thick material with horizontal grain.
- Includes adjustable glides.
- Edges are DeskMakers standard 2MM PVC edgebanding for both TFL and HPL finishes.
- Includes brackets for attaching to desk/credenza shell.
- Modesty extends 1" past worktop to allow bridge to connect to height adjustable shell and maintain gap for moving worksurface.
- Half leg support on side abutting height adjustable desk.
- Storage peds cannot be used under 19" deep bridges.

Full Height Stack-on Counter

Model Number	Depth	Length	Height	TFL (T)	HPL (H)
OV-STFH-1230?	12	30	41	$1,753	$3,172
OV-STFH-1236?	12	36	41	$1,893	$3,603
OV-STFH-1242?	12	42	41	$2,032	$4,276
OV-STFH-1248?	12	48	41	$2,174	$5,162
OV-STFH-1254?	12	54	41	$2,330	$5,899
OV-STFH-1260?	12	60	41	$2,458	$6,901
OV-STFH-1266?	12	66	41	$2,620	$7,358
OV-STFH-1272?	12	72	41	$2,700	$7,814

- All 3/4" thick material with horizontal grain.
- Includes adjustable glides.
- Edges are DeskMakers standard 2MM PVC edgebanding for TFL and self-edge for HPL.
- Installs on desk height shell in field. Can add glass topper on page 33.

Desk Shell Transaction Height

1-7/8" Thick Shell

Model Number	Depth	Length	Height	Top	TFL (T)	HPL (H)
30" Deep				(specified separately)		
OV-AST2-3260-?	32	60	40	23x54	$1,862	$3,987
OV-AST2-3266-?	32	66	40	23x60	$1,869	$3,994
OV-AST2-3272-?	32	72	40	23x66	$1,876	$4,001
OV-AST2-3278-?	32	78	40	23x72	$2,448	$5,340
OV-AST2-3284-?	32	84	40	23x78	$2,455	$5,347
OV-AST2-3290-?	32	90	40	23x84	$2,462	$5,354
36" Deep						
OV-AST2-3860-?	38	60	40	29x54	$1,868	$3,933
OV-AST2-3866-?	38	66	40	29x60	$1,875	$4,000
OV-AST2-3872-?	38	72	40	29x66	$1,882	$4,007
OV-AST2-3878-?	38	78	40	29x72	$2,455	$5,346
OV-AST2-3884-?	38	84	40	29x78	$2,462	$5,353
OV-AST2-3890-?	38	90	40	29x84	$2,469	$5,360

- 1-7/8" thick outer shell with horizontal grain. Internal stretchers are 1 1/8" thick.
- Includes adjustable glides.
- Edges are DeskMakers standard 2MM PVC edgebanding for both TFL and HPL finishes.
- To be completed with a worktop and height adjustable base. See page 61 for worktops, and pages 68-72 for base options.
- Can be paired with the Laminate Transaction Counter (Pg 32) and/or Accent Panels (Pg 38-39).

Return Shell Transaction Height

1-7/8" Thick Shell

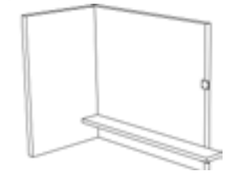

Left Model Shown

Model Number		Depth	Length	Height	Top	TFL (T)	HPL (H)
19" Deep					(specified separately)		
Left Model	**Right Model**						
OV-ART2-2639-L-?	OV-ART2-2639-R-?	26	39	40	24x36	$1,105	$2,463
OV-ART2-2645-L-?	OV-ART2-2645-R-?	26	45	40	24x42	$1,110	$2,468
OV-ART2-2651-L-?	OV-ART2-2651-R-?	26	51	40	24x48	$1,678	$3,803
OV-ART2-2657-L-?	OV-ART2-2657-R-?	26	57	40	24x54	$1,684	$3,809
OV-ART2-2663-L-?	OV-ART2-2663-R-?	26	63	40	24x60	$1,689	$3,814
OV-ART2-2669-L-?	OV-ART2-2669-R-?	26	69	40	24x66	$1,694	$3,819
OV-ART2-2675-L-?	OV-ART2-2675-R-?	26	75	40	24x72	$1,745	$3,870
OV-ART2-2681-L-?	OV-ART2-2681-R-?	26	81	40	24x78	$1,750	$3,875
OV-ART2-2687-L-?	OV-ART2-2687-R-?	26	87	40	24x84	$1,755	$3,880
24" Deep							
Left Model	**Right Model**						
OV-ART2-3239-L-?	OV-ART2-3239-R-?	32	39	40	30x36	$1,108	$2,466
OV-ART2-3245-L-?	OV-ART2-3245-R-?	32	45	40	30x42	$1,676	$3,801
OV-ART2-3251-L-?	OV-ART2-3251-R-?	32	51	40	30x48	$1,681	$3,806
OV-ART2-3257-L-?	OV-ART2-3257-R-?	32	57	40	30x54	$1,687	$3,812
OV-ART2-3263-L-?	OV-ART2-3263-R-?	32	63	40	30x60	$1,692	$3,817
OV-ART2-3269-L-?	OV-ART2-3269-R-?	32	69	40	30x66	$1,697	$3,822
OV-ART2-3275-L-?	OV-ART2-3275-R-?	32	75	40	30x72	$1,748	$3,873
OV-ART2-3281-L-?	OV-ART2-3281-R-?	32	81	40	30x78	$1,753	$3,878
OV-ART2-3287-L-?	OV-ART2-3287-R-?	32	87	40	30x84	$1,758	$3,883

- 1-7/8" thick material with horizontal grain. Stretcher Bar is 1 1/8" thick.
- Includes adjustable glides.
- Edges are DeskMakers standard 2MM PVC edgebanding for both TFL and HPL finishes.
- Includes brackets for attaching to desk shell. Cannot be used independently.
- To be completed with a worktop and height adjustable base. See page 61 for worktops, and pages 68-72 for base options.
- 36" Return for use with 3-Leg base only. Returns over 60" to be used as independent height adjustable worksurfaces only.

Fixed Return Transaction Height

1-7/8" Thick Shell

Left Model Shown

Model Number		Depth	Length	Height	Top	TFL (T)	HPL (H)
19" Deep							
Left Model	**Right Model**						
OV-FRT2-1939-L-?	OV-FRT2-1939-R-?	19	39	40	17x36	$1,131	$2,490
OV-FRT2-1945-L-?	OV-FRT2-1945-R-?	19	45	40	17x42	$1,136	$2,495
OV-FRT2-1951-L-?	OV-FRT2-1951-R-?	19	51	40	17x48	$1,141	$2,500
OV-FRT2-1957-L-?	OV-FRT2-1957-R-?	19	57	40	17x54	$1,709	$3,834
OV-FRT2-1963-L-?	OV-FRT2-1963-R-?	19	63	40	17x60	$1,716	$3,841
OV-FRT2-1969-L-?	OV-FRT2-1969-R-?	19	69	40	17x66	$1,721	$3,846
OV-FRT2-1975-L-?	OV-FRT2-1975-R-?	19	75	40	17x72	$1,771	$3,896
24" Deep							
Left Model	**Right Model**						
OV-FRT2-2439-L-?	OV-FRT2-2439-R-?	24	39	40	22x36	$1,135	$2,494
OV-FRT2-2445-L-?	OV-FRT2-2445-R-?	24	45	40	22x42	$1,140	$2,499
OV-FRT2-2451-L-?	OV-FRT2-2451-R-?	24	51	40	22x48	$1,145	$2,504
OV-FRT2-2457-L-?	OV-FRT2-2457-R-?	24	57	40	22x54	$1,758	$3,883
OV-FRT2-2463-L-?	OV-FRT2-2463-R-?	24	63	40	22x60	$1,765	$3,890
OV-FRT2-2469-L-?	OV-FRT2-2469-R-?	24	69	40	22x66	$1,770	$3,895
OV-FRT2-2475-L-?	OV-FRT2-2475-R-?	24	75	40	22x72	$1,775	$3,900

- 1-7/8" outer shell with 1 1/8" worktop and half leg. Horizontal grain.
- Includes adjustable glides.
- Edges are DeskMakers standard 2MM PVC edgebanding for both TFL and HPL finishes.
- Modesty extends 1" past worktop to allow return to connect to height adjustable shell and maintain gap for moving worksurface.
- Half leg support on side abutting height adjustable desk.
- Storage peds cannot be used under 19" deep returns.

Bridge Shell Transaction Height

1-7/8" Thick Shell

Model Number	Depth	Length	Height	Top	TFL (T)	HPL (H)
				(specified separately)		
OV-ABT2-0638-?	6	38	40	24x36	$1,066	$2,425
OV-ABT2-0644-?	6	44	40	24x42 or 30x42	$1,073	$2,431
OV-ABT2-0650-?	6	50	40	24x48 or 30x48	$1,078	$2,436
OV-ABT2-0656-?	6	56	40	24x54 or 30x54	$1,083	$2,441
OV-ABT2-0662-?	6	62	40	24x60 or 30x60	$1,088	$2,446
OV-ABT2-0668-?	6	68	40	24x66 or 30x66	$1,093	$2,451
OV-ABT2-0674-?	6	74	40	24x72 or 30x72	$1,662	$3,787
OV-ABT2-0680-?	6	80	40	24x78 or 30x78	$1,667	$3,792
OV-ABT2-0686-?	6	86	40	24x84 or 30x84	$1,671	$3,796

- 1-7/8" thick modesty with 1 1/8" stretcher bar. Horizontal grain.
- Includes adjustable glides.
- Edges are DeskMakers standard 2MM PVC edgebanding for both TFL and HPL finishes.
- Includes brackets for attaching to desk/credenza shells. Cannot be used independently.
- To be completed with a worktop and height adjustable base. See page 61 for worktops, and pages 68-72 for base options.
- Bridges are sized 2" larger than the worktop to be used to allow for 1" clearance on either side of the moving top.
- 36" Bridge for use with 3-Leg base only. Bridges over 60" to be used as independent height adjustable worksurfaces only.

Fixed Bridge Transaction Height

1-7/8" Thick Shell

Left Model Shown

Model Number		Depth	Length	Height	Top	TFL (T)	HPL (H)
30" Deep							
Left Model	**Right Model**						
OV-FBT2-1937-L-?	OV-FBT2-1937-R-?	19	37	40	17x36	$1,099	$2,458
OV-FBT2-1943-L-?	OV-FBT2-1943-R-?	19	43	40	17x42	$1,107	$2,465
OV-FBT2-1949-L-?	OV-FBT2-1949-R-?	19	49	40	17x48	$1,112	$2,470
OV-FBT2-1955-L-?	OV-FBT2-1955-R-?	19	55	40	17x54	$1,117	$2,475
OV-FBT2-1961-L-?	OV-FBT2-1961-R-?	19	61	40	17x60	$1,122	$2,480
OV-FBT2-1967-L-?	OV-FBT2-1967-R-?	19	67	40	17x66	$1,129	$2,488
OV-FBT2-1973-L-?	OV-FBT2-1973-R-?	19	73	40	17x72	$1,134	$2,493
36" Deep							
Left Model	**Right Model**						
OV-FBT2-2437-L-?	OV-FBT2-2437-R-?	24	37	40	22x36	$1,101	$2,460
OV-FBT2-2443-L-?	OV-FBT2-2443-R-?	24	43	40	22x42	$1,108	$2,467
OV-FBT2-2449-L-?	OV-FBT2-2449-R-?	24	49	40	22x48	$1,113	$2,472
OV-FBT2-2455-L-?	OV-FBT2-2455-R-?	24	55	40	22x54	$1,118	$2,477
OV-FBT2-2461-L-?	OV-FBT2-2461-R-?	24	61	40	22x60	$1,123	$2,482
OV-FBT2-2467-L-?	OV-FBT2-2467-R-?	24	67	40	22x66	$1,131	$2,489
OV-FBT2-2473-L-?	OV-FBT2-2473-R-?	24	73	40	22x72	$1,136	$2,494

- 1-7/8" modesty panel with 1 1/8" worktop and half leg. Horizontal grain.
- Includes adjustable glides.
- Edges are DeskMakers standard 2MM PVC edgebanding for both TFL and HPL finishes.
- Includes brackets for attaching to desk/credenza shell.
- Modesty extends 1" past worktop to allow bridge to connect to height adjustable shell and maintain gap for moving worksurface.
- Half leg support on side abutting height adjustable desk.
- Storage peds cannot be used under 19" deep bridges.

Tops - Required for all "Shell" Units

1-1/8" Thick

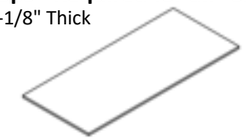

Model Number	Depth	Length	T1	T2	H1
Overture Desk Shell Exclusive Sizes					
23" Deep for 30" Desks					
OV-WS01-2354-??-??	23	54	$351	$386	$593
OV-WS01-2360-??-??	23	60	$354	$389	$595
OV-WS01-2366-??-??	23	66	$356	$392	$598
OV-WS01-2372-??-??	23	72	$359	$395	$599
OV-WS01-2378-??-??	23	78	$440	$484	$758
OV-WS01-2384-??-??	23	84	$443	$487	$761
29" Deep for 36" Desks					
OV-WS01-2954-??-??	29	54	$476	$524	$828
OV-WS01-2960-??-??	29	60	$478	$526	$831
OV-WS01-2966-??-??	29	66	$479	$527	$833
OV-WS01-2972-??-??	29	72	$481	$529	$836
OV-WS01-2978-??-??	29	78	$606	$667	$1,073
OV-WS01-2984-??-??	29	84	$608	$669	$1,075
Tops for Returns and Bridges					
24" Deep					
TP-RECT-2436-??-??	24	36	$263	$289	$429
TP-RECT-2442-??-??	24	42	$266	$292	$431
TP-RECT-2448-??-??	24	48	$350	$385	$590
TP-RECT-2454-??-??	24	54	$351	$386	$593
TP-RECT-2460-??-??	24	60	$354	$389	$595
TP-RECT-2466-??-??	24	66	$356	$392	$598
TP-RECT-2472-??-??	24	72	$359	$395	$599
TP-RECT-2478-??-??	24	78	$440	$485	$758
TP-RECT-2484-??-??	24	84	$443	$487	$761
30" Deep					
TP-RECT-3036-??-??	30	36	$347	$382	$587
TP-RECT-3042-??-??	30	42	$350	$385	$590
TP-RECT-3048-??-??	30	48	$474	$521	$827
TP-RECT-3054-??-??	30	54	$476	$524	$828
TP-RECT-3060-??-??	30	60	$478	$525	$831
TP-RECT-3066-??-??	30	66	$479	$527	$833
TP-RECT-3072-??-??	30	72	$481	$529	$836
TP-RECT-3078-??-??	30	78	$606	$667	$1,073
TP-RECT-3084-??-??	30	84	$608	$669	$1,075

- All 1-1/8" thick material with horizontal grain.
- Edges are DeskMakers standard 2MM PVC edgebanding for both TFL and HPL finishes.

reception
HA Overture

Hanging Modesty Panels

Model Number	Length	Height	TFL (T)	HPL (H)
TX-LMOD-1830-?	30	18	$242	$407
TX-LMOD-1832-?	32	18	$248	$418
TX-LMOD-1834-?	34	18	$251	$424
TX-LMOD-1836-?	36	18	$258	$434
TX-LMOD-1838-?	38	18	$263	$444
TX-LMOD-1840-?	40	18	$266	$448
TX-LMOD-1842-?	42	18	$271	$456
TX-LMOD-1844-?	44	18	$275	$462
TX-LMOD-1846-?	46	18	$280	$472
TX-LMOD-1848-?	48	18	$286	$482
TX-LMOD-1850-?	50	18	$289	$486
TX-LMOD-1852-?	52	18	$299	$504
TX-LMOD-1854-?	54	18	$305	$513
TX-LMOD-1856-?	56	18	$311	$523
TX-LMOD-1858-?	58	18	$318	$535
TX-LMOD-1860-?	60	18	$326	$550
TX-LMOD-1862-?	62	18	$334	$562
TX-LMOD-1864-?	64	18	$346	$582
TX-LMOD-1866-?	66	18	$353	$595
TX-LMOD-1868-?	68	18	$357	$602
TX-LMOD-1870-?	70	18	$373	$627
TX-LMOD-1872-?	72	18	$380	$640
TX-LMOD-1874-?	74	18	$389	$655
TX-LMOD-1876-?	76	18	$404	$681
TX-LMOD-1878-?	78	18	$421	$709
TX-LMOD-1880-?	80	18	$452	$760
TX-LMOD-1882-?	82	18	$467	$786
TX-LMOD-1884-?	84	18	$482	$811

- 3/4" thick material. Horizontal grain with DeskMakers standard 2MM PVC edgebanding for both TFL and HPL finishes.
- Includes L- brackets to attach to worksurface, 2-4 depending on length
- A modesty that is at least 2" shorter that the worksurface is recommended to avoid conflict as the desk moves.
- Modesty should be inset at least 1" from front of worksurface. Install after worksurface is attached to height adjustable base for best results.

height adjustable base finishes

Hover Lift Bases

standard

premium - 10% upcharge (OP-COLOR)

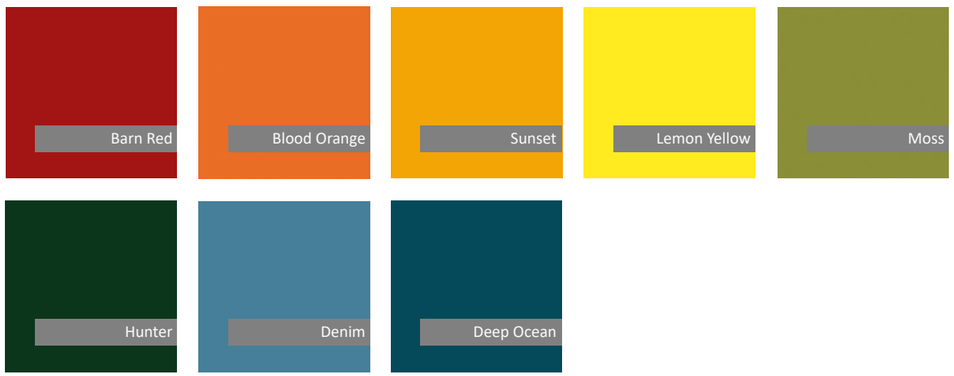

Hover Reach Bases

standard

premium - 10% upcharge (OP-COLOR)

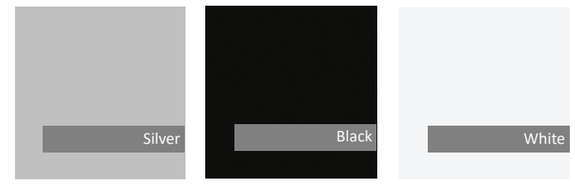

Hover Boost Bases

standard

premium - 10% upcharge (OP-COLOR)

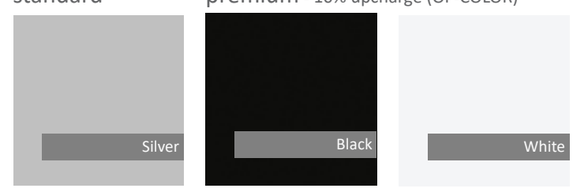

Hover Lift Height Adjustable Bases

Features

Number of Legs	2 or 3
Height Range w/ Worksurface	27" - 46"
Number of Stages	2
Worksurface Lengths	48" - 84" in 6" increments
Worksurface Depths	24", 30" & 36"
Lifting Capacity	250 lbs (includes worksurface)
Adjustment Speed	1.5"/second
Cord Length	118" long
Finishes	4 standard, 8 at upcharge
Frame	Size Specific
Column Shape	Square
Safety	Anti-Collision Option

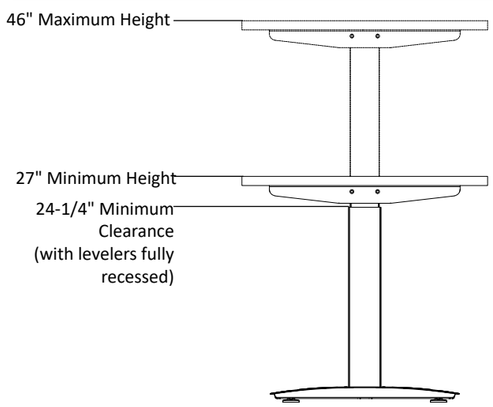

Foot Length

A 60" long worksurface is shown in examples below. The base will 9" shorter that the top, with a 4 ½" inset on each side when centered.

24" Deep Worksurface

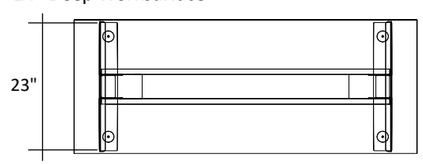

30" Deep Worksurface

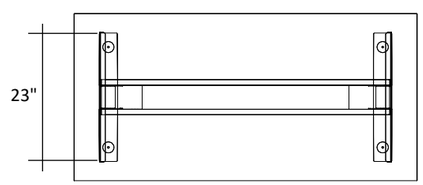

36" Deep Worksurface

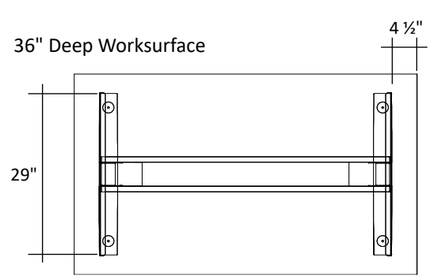

* 29" foot may also be specified for 30" worksurfaces.

Standard Up/Down Control

- Standard on Hover Lift bases
- Simple Up/Down function
- After 2 minutes defaults control box to standby mode

Programmable Digital Control

- Add-on option for Hover Lift bases : AC-CNTL-DIGI for $239
- Save 4 different positions
- LCD display
- Set in centimeters or inches
- After 2 minutes defaults control box to standby mode

Locking Casters

The Hover Lift height adjustable bases are available with optional locking casters. Casters increase the overall table height by 2".

External Safety Sensor

An External Safety Sensor is able to detect even the smallest deformation. When a collision or restriction of movement is detected, the External Safety Sensor triggers the motors to move in the opposite direction to release the pinched obstacle. The External Safety Sensor can be added to the Hover Lift bases after installation. AC-DRBK-OMT for $319.

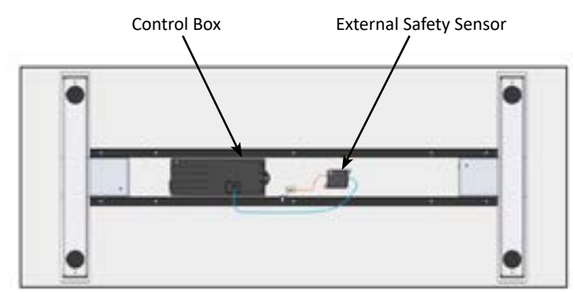

View of Underside of Table

All Hover electric height adjustable bases are equipped with Intelligent System Protection (ISP). ISP is used to protect base motors, control boxes and internal components from damage resulting from collision or restriction of movement. The ISP is not intended for protection of the end user, and is less sensitive than the External Safety Sensor.

Hover Reach Height Adjustable Bases

Features

Number of Legs	2 or 3
Height Range w/ Worksurface	22.75" - 49"
Number of Stages	3
Worksurface Lengths	42" - 72" (Up to 84" w/ ext. kit)
Worksurface Depths	24", 30" & 36"
Lifting Capacity	220 lbs (includes worksurface)
Adjustment Speed	1.4"/second
Cord Length	72" long
Finishes	Silver
Frame	Adjustable
Column Shape	Square
Safety	Anti-Collision Built-in

Foot Length

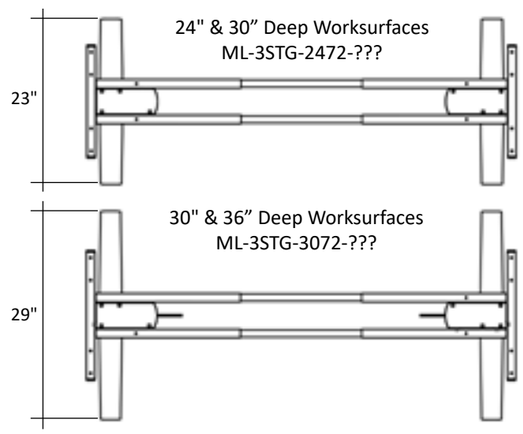

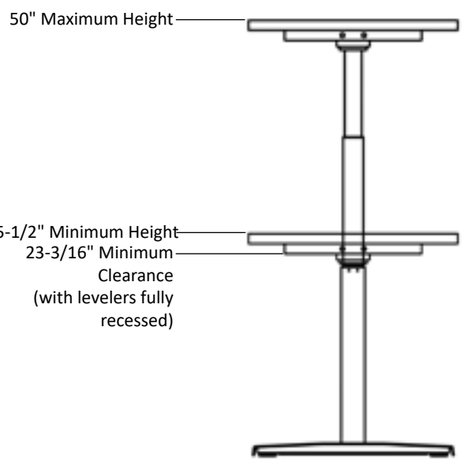

Quick Install Legs

- Ships in 1 box
- No tools required for assembly.

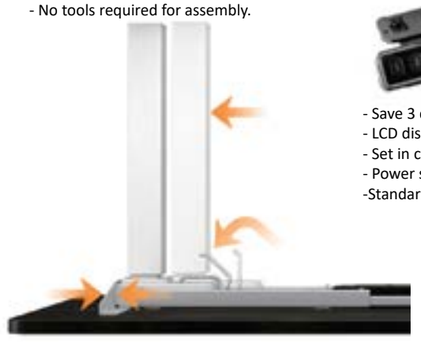

Programmable Digital Control

- Save 3 different positions
- LCD display
- Set in centimeters or inches
- Power standby mode
-Standard with Hover Reach

Hover Boost Height Adjustable Bases

Features

Number of Legs	2
Height Range w/ Worksurface	27.75" - 47.4"
Number of Stages	2
Worksurface Lengths	42" - 72" (Up to 84" w/ ext. kit)
Worksurface Depths	24", 30" & 36"
Lifting Capacity	200 lbs (includes worksurface)
Adjustment Speed	1.42"/second
Cord Length	72" long
Finishes	Black, White, Silver
Frame	Adjustable
Column Shape	Square
Safety	Anti-Collision Built-in

Foot Length

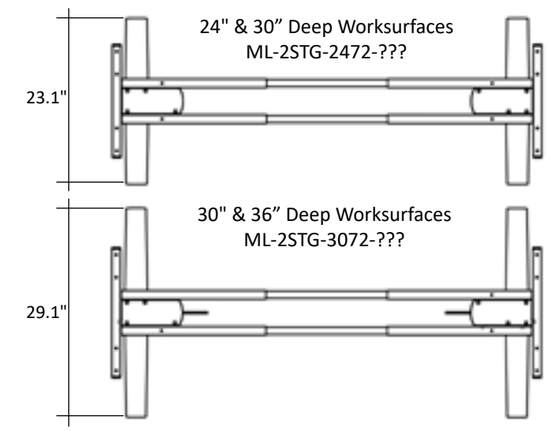

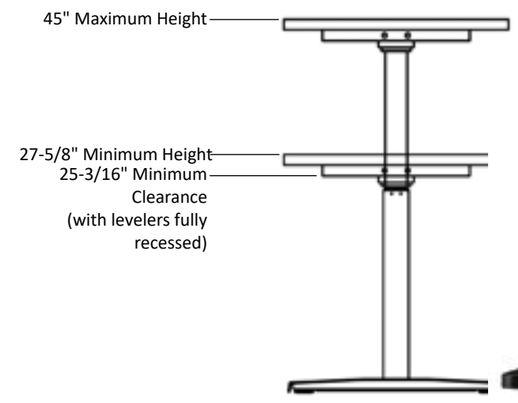

Quick Install Legs

- Ships in 1 box
- No tools required for assembly.

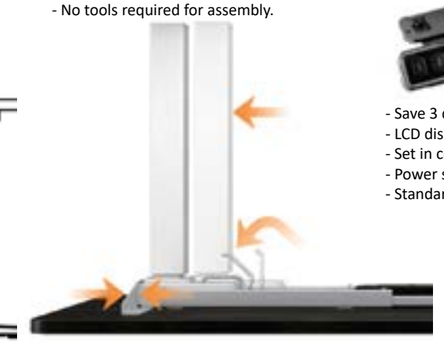

Programmable Digital Control

- Save 3 different positions
- LCD display
- Set in centimeters or inches
- Power standby mode
- Standard with Hover Boost

Hover Lift Height Adjustable Bases

Electric - 2 Leg

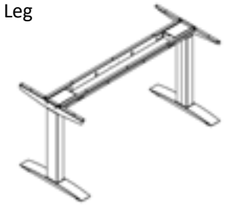

Model Number	T-Foot Length	Worksurface Width	Worksurface Length	Price
For 24" and 30" Deep Worksurfaces				
HV-AE23-2448-??	23	24/30	48	$2,552
HV-AE23-2454-??	23	24/30	54	$2,567
HV-AE23-2460-??	23	24/30	60	$2,571
HV-AE23-2466-??	23	24/30	66	$2,588
HV-AE23-2472-??	23	24/30	72	$2,599
HV-AE23-2478-??	23	24/30	78	$2,613
HV-AE23-2484-??	23	24/30	84	$2,699
For 30" and 36" Deep Worksurfaces				
HV-AE29-3648-??	29	30/36	48	$2,591
HV-AE29-3654-??	29	30/36	54	$2,606
HV-AE29-3660-??	29	30/36	60	$2,610
HV-AE29-3666-??	29	30/36	66	$2,627
HV-AE29-3672-??	29	30/36	72	$2,638
HV-AE29-3678-??	29	30/36	78	$2,652
HV-AE29-3684-??	29	30/36	84	$2,738

- Please specify base finish when ordering. Premium colors available with 10% increase, OP-COLOR. See page 6 for finish options.
- Tops specified separately.
- Bases ship unassembled.
- Includes adjustable glides. 2" high Casters available, add OP-CAST-OMT-A for $136 (set of 4).
- Programmable digital control available, add AC-CNTL-DIGI for $239.
- External safety sensor available, add AC-DRBK-OMT for $319.

NOTE: Height adjustable bases have special discounting, please contact your local representative.

Hover Lift Height Adjustable Bases

Electric - 3 Leg - 120 Degree

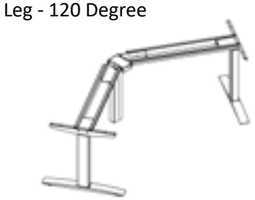

Model Number	T-Foot Length	Worksurface Width	Worksurface Length	Price
For 24" Deep Worksurfaces				
HV-AE12-4242-23-??	23	42	42	$3,617
HV-AE12-4848-23-??	23	48	48	$3,675
HV-AE12-5454-23-??	23	54	54	$3,803
For 30" Deep Worksurfaces				
HV-AE12-4242-29-??	29	42	42	$3,656
HV-AE12-4848-29-??	29	48	48	$3,714
HV-AE12-5454-29-??	29	54	54	$3,842

- Please specify base finish when ordering. Premium colors available with 10% increase, OP-COLOR. See page 6 for finish options.
- Tops specified separately.
- Bases ship unassembled.
- Programmable digital control available, add AC-CNTL-DIGI for $239.
- External safety sensor available, add AC-DRBK-OMT for $319.

NOTE: Height adjustable bases have special discounting, please contact your local representative.

Hover Lift Height Adjustable Bases

Electric - 3 Leg - 90 Degree Symmetrical

Model Number	T-Foot Length	Worksurface Width	Worksurface Length	Price
For 24" Deep Worksurfaces				
HV-AE90-4848-23-??	23	48	48	$3,800
HV-AE90-5454-23-??	23	54	54	$3,858
HV-AE90-6060-23-??	23	60	60	$3,986
For 30" Deep Worksurfaces				
HV-AE90-4848-29-??	29	48	48	$3,797
HV-AE90-5454-29-??	29	54	54	$3,839
HV-AE90-6060-29-??	29	60	60	$3,897

- Please specify base finish when ordering. Premium colors available with 10% increase, OP-COLOR. See page 6 for finish options.
- Tops specified separately.
- Bases ship unassembled.
- Programmable digital control available, add AC-CNTL-DIGI for $239.
- External safety sensor available, add AC-DRBK-OMT for $319.

NOTE: Height adjustable bases have special discounting, please contact your local representative.

Hover Lift Height Adjustable Bases

Electric - 3 Leg - 90 Degree

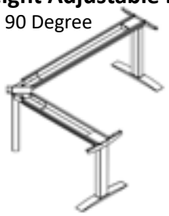

Model Number	T-Foot Length	Worksurface Width	Worksurface Length	Price
For 24" Deep Return Connection and 24" Deep Workspace				
HV-AE90-4266-23-??	23	42	66	$3,840
HV-AE90-4272-23-??	23	42	72	$3,844
HV-AE90-4278-23-??	23	42	78	$3,861
HV-AE90-4866-23-??	23	48	66	$3,861
HV-AE90-4872-23-??	23	48	72	$3,865
HV-AE90-4878-23-??	23	48	78	$3,882
HV-AE90-5466-23-??	23	54	66	$3,890
HV-AE90-5472-23-??	23	54	72	$3,894
HV-AE90-5478-23-??	23	54	78	$3,911
HV-AE90-6066-23-??	23	60	66	$3,954
HV-AE90-6072-23-??	23	60	72	$3,958
HV-AE90-6078-23-??	23	60	78	$3,975
For 24" Deep Return Connection and 30" Deep Workspace				
HV-AE90-4266-29-??	23/29	42	66	$3,864
HV-AE90-4272-29-??	23/29	42	72	$3,879
HV-AE90-4278-29-??	23/29	42	78	$3,883
HV-AE90-4866-29-??	23/29	48	66	$3,864
HV-AE90-4872-29-??	23/29	48	72	$3,879
HV-AE90-4878-29-??	23/29	48	78	$3,883
HV-AE90-5466-29-??	23/29	54	66	$3,885
HV-AE90-5472-29-??	23/29	54	72	$3,900
HV-AE90-5478-29-??	23/29	54	78	$3,904
HV-AE90-6066-29-??	23/29	60	66	$3,914
HV-AE90-6072-29-??	23/29	60	72	$3,929
HV-AE90-6078-29-??	23/29	60	78	$3,933

- Please specify base finish when ordering. Premium colors available with 10% increase, OP-COLOR. See page 6 for finish options.
- Tops specified separately.
- Bases ship unassembled.
- Programmable digital control available, add AC-CNTL-DIGI for $239.
- External safety sensor available, add AC-DRBK-OMT for $319.

NOTE: Height adjustable bases have special discounting, please contact your local representative.

Hover Reach Height Adjustable Bases - 2 Leg for Rectangular Worksurfaces

Electric - 3 Stage

Model Number	T-Foot Length	Worksurface Width	Worksurface Length	Price
For 24" and 30" Deep Worksurfaces				
ML-3STG-2472-SLV	23	24/30	48/72	$1,064
For 30" and 36" Deep Worksurfaces				
ML-3STG-3072-SLV	29	30/36	48/72	$1,096

- Silver finish standard.
- Tops specified separately. Bases ship unassembled with tool-free quick-install components.
- Includes adjustable steel frame, adjustable glides and programmable digital control.
- Base can accommodate tops up to 84" with the addition of ML-2LEG-EXKT for $348

NOTE: Height adjustable bases have special discounting, please contact your local representative.

Hover Reach Height Adjustable Bases - 3 Leg for 120 or 90 Degree Worksurfaces

Electric - 3 Stage

Model Number	T-Foot Length	Worksurface Width	Worksurface Length	Price
For 24" and 30" Deep Worksurfaces				
ML-3LEG-24-Q-SLV	23	24/30	84x84	$1,863
For 30" and 36" Deep Worksurfaces				
ML-3LEG-30-Q-SLV	29	30/36	84x84	$1,894

- Silver finish standard.
- Tops specified separately. Bases ship unassembled with tool-free quick-install components.
- Includes adjustable steel frame, adjustable glides and programmable digital control.
- Universal bracket for both 120 degree and 90 degree applications.

NOTE: Height adjustable bases have special discounting, please contact your local representative.

Hover Boost Height Adjustable Bases - 2 Leg for Rectangular Worksurfaces

Electric - 2 Stage

Model Number	T-Foot Length	Worksurface Width	Worksurface Length	Price
For 24" and 30" Deep Worksurfaces				
ML-2STG-2472-???	23	24/30	42/72	$886
For 30" and 36" Deep Worksurfaces				
ML-2STG-3072-???	29	30/36	42/72	$913

- Silver finish standard. Black and White may require additional lead time.
- Tops specified separately. Bases ship unassembled with tool-free quick-install components.
- Includes adjustable steel frame, adjustable glides and programmable digital control.
- Base can accommodate tops up to 84" with the addition of ML-2LEG-EXKT for $348

NOTE: Height adjustable bases have special discounting, please contact your local representative.

Please see website for current Terms and Conditions:
www.deskmakers.com

Limited Lifetime Warranty

(Effective for Furniture Sold as of January 1, 2015)

DeskMakers, Inc. furniture is warranted against defects in material and workmanship given normal usage and care for as long the original purchaser owns it.

DeskMakers will repair or replace at its option, and at its own cost, any product that develops a defect during the warranty period. In some cases, DeskMakers may elect to refund the customer's original purchase price (less reasonable depreciation) in lieu of repair or replacement. Repair, replacement, or refund is the purchaser's sole remedy, the choice of which rests solely with DeskMakers. DeskMakers shall not be liable for any incidental or consequential damages including lost profits and loss of use of product.

Limitations:

- The warranty for wood guest chair frames shall be limited to 10 years.
- The warranty for PVC edges, wood veneer edges, HPL edges, mechanical parts such as ball bearing slides, door hinges, floor glides, fabric (except for COM fabrics), seating foam, and wood veneer surfaces shall be limited to five (5) years.
- The warranty for training tables shall be limited to three (3) years.
- The warranty for engineered-to-order "custom" products shall be limited to three (3) years.
- The warranty for height adjustable bases shall be limited to two (2) years on electrical components, five (5) years on mechanical components and ten (10) years on structural components.
- This warranty does not cover:
  - Normal wear and tear.
  - The color fastness of any laminate, wood, or fabric, as such colors can fade or darken with normal use and as a result of exposure to light.
  - Customer's Own Materials (COM).
  - Damage caused by placing anything other than hanging files in file drawers.
  - Rental furniture.
  - Labor and service.

Normal Usage:

This warranty does not apply to damages or failures resulting from misuse, abuse, negligence, or improper care. For casegoods, tables, and desking, normal usage is limited to 40 hours per week. For seating, normal usage is limited to 40 hours per week by individuals of 250 lbs. or less.

Locations

Los Angeles
Deskmakers Headquarters
6525 Flotilla Street
Commerce, CA 90040

Dallas
Dallas Factory
1110 Inwood Road Suite 101
Dallas, TX 75247

DeskMakers

Phone: 323.264.2260 | Fax: 323.725.6960
www.deskmakers.com